FLUKE Calibration

2271A

Automated Pressure Calibrator

Operators Manual

December 2015 Rev. 1, 4/18

© 2015-2018 Fluke Corporation. All rights reserved. Specifications are subject to change without notice.
All product names are trademarks of their respective companies.

LIMITED WARRANTY AND LIMITATION OF LIABILITY

Each Fluke product is warranted to be free from defects in material and workmanship under normal use and service. The warranty period is one year and begins on the date of shipment. Parts, product repairs, and services are warranted for 90 days. This warranty extends only to the original buyer or end-user customer of a Fluke authorized reseller, and does not apply to fuses, disposable batteries, or to any product which, in Fluke's opinion, has been misused, altered, neglected, contaminated, or damaged by accident or abnormal conditions of operation or handling. Fluke warrants that software will operate substantially in accordance with its functional specifications for 90 days and that it has been properly recorded on non-defective media. Fluke does not warrant that software will be error free or operate without interruption.

Fluke authorized resellers shall extend this warranty on new and unused products to end-user customers only but have no authority to extend a greater or different warranty on behalf of Fluke. Warranty support is available only if product is purchased through a Fluke authorized sales outlet or Buyer has paid the applicable international price. Fluke reserves the right to invoice Buyer for importation costs of repair/replacement parts when product purchased in one country is submitted for repair in another country.

Fluke's warranty obligation is limited, at Fluke's option, to refund of the purchase price, free of charge repair, or replacement of a defective product which is returned to a Fluke authorized service center within the warranty period.

To obtain warranty service, contact your nearest Fluke authorized service center to obtain return authorization information, then send the product to that service center, with a description of the difficulty, postage and insurance prepaid (FOB Destination). Fluke assumes no risk for damage in transit. Following warranty repair, the product will be returned to Buyer, transportation prepaid (FOB Destination). If Fluke determines that failure was caused by neglect, misuse, contamination, alteration, accident, or abnormal condition of operation or handling, including overvoltage failures caused by use outside the product's specified rating, or normal wear and tear of mechanical components, Fluke will provide an estimate of repair costs and obtain authorization before commencing the work. Following repair, the product will be returned to the Buyer transportation prepaid and the Buyer will be billed for the repair and return transportation charges (FOB Shipping Point).

THIS WARRANTY IS BUYER'S SOLE AND EXCLUSIVE REMEDY AND IS IN LIEU OF ALL OTHER WARRANTIES, EXPRESS OR IMPLIED, INCLUDING BUT NOT LIMITED TO ANY IMPLIED WARRANTY OF MERCHANTABILITY OR FITNESS FOR A PARTICULAR PURPOSE. FLUKE SHALL NOT BE LIABLE FOR ANY SPECIAL, INDIRECT, INCIDENTAL, OR CONSEQUENTIAL DAMAGES OR LOSSES, INCLUDING LOSS OF DATA, ARISING FROM ANY CAUSE OR THEORY.

Since some countries or states do not allow limitation of the term of an implied warranty, or exclusion or limitation of incidental or consequential damages, the limitations and exclusions of this warranty may not apply to every buyer. If any provision of this Warranty is held invalid or unenforceable by a court or other decision-maker of competent jurisdiction, such holding will not affect the validity or enforceability of any other provision.

Fluke Corporation
P.O. Box 9090
Everett, WA 98206-9090
U.S.A.

Fluke Europe B.V.
P.O. Box 1186
5602 BD Eindhoven
The Netherlands

11/99

Table of Contents

Title	Page
Introduction	1
Contact Fluke Calibration	2
Safety Information	2
Symbols	3
Specifications	4
Calibration and Repair Information	4
Installation	4
Unpack the Product	4
Product Placement	5
Mains Voltage	6
Module Installation	8
Barometric Reference Module (BRM)	9
Turn on the Product	10
Main Screens	10
Setup Menu	14
Instrument Setup Menu	16
Instrument Settings Menu	16
Remote Port Menu	18
External 24V Menu	18
CPS Menu	18
Pressure Uncertainty Menu	19
About this Instrument	19
Front-Panel Features	20
Rear-Panel Features	23
Operation	24
Pressure Control Settings	24
Set Target Pressure (Setpoint)	25
Step Pressure Up or Down	25
Jog Pressure	25
Vent and Abort	26
Pressure Measurement	26
Rear-Panel Manifold Pressure Connections	26
SUPPLY Port	27
EXHAUST Port (Vacuum Pump if Required)	27
VENT Port	28

Test Ports 28
HC20 29
Connect a UUT 31
Test Port Insert 33
REF Port 34
Pressure Control Settings 34
Control Modes 36
Dynamic Control Mode 36
Static Control Mode 37
Control Limits (Only for Static Control) 37
Stability Limit (Only for Static Control) 37
Slew Rate (Rate of Pressure Change) 38
Safety Limits 38
Upper Limit 38
Lower Limit 38
Auto Vent 38
Measurement Setup 39
Unit and Custom Units 39
Measurement Modes 40
Measurement Resolution 40
Module Selection 41
AutoZero 41
Atmosphere 42
Head Height 42
Pressure Filter 43
PM500 Absolute Zeroing 43
Required Equipment 43
PM500 Full Scale ≤700 kPa Absolute Zeroing 44
PM500 Full Scale >700 kPa Absolute Zeroing 46
General Tasks 47
Leak Test 48
Pressure Switch 48
Exercise 49
Zero PMM 49
CPS Cleanout (If CPS is installed) 49
CPS Purge 50
Calibration Tasks 50
Transmitter 50
UUT 51
New 51
Delete 52
Rename 52
Edit 52
Measure Setup 53
Control Setup 53
Run a Transmitter mA Program 53
Pressure Device 53
UUT 54
New 54
Delete 54
Rename 54
Edit 55
Measure Setup 55
Control Setup 55
Run a Pressure Device Program 56

HART Operation 56
Pressure Transmitter Instructions 56
Analog Transmitters 56
Smart Transmitters 57
Using the mA Function to Test and Troubleshoot 57
Connect to a HART Transmitter 60
HART Tasks 60
Trim PV Zero 60
Trim Current Output 61
Trim by Re-ranging 61
Write LRV/URV 62
Hart Diagnostics 63
Write PV Unit 63
Write Tag 64
Write Message 64
Description 64
HART Data 65
mA/VDC 67
Enable mA/VDC Function 67
VDC measurement 67
mA Measurement 67
Contamination Prevention System (CPS) 68
Install the CPS 69
CPS Use 71
Test Port Insert 75
Disconnect the CPS 76
CPS Cleaning 76
External Driver Communication 78
Configure the Drivers 78
Driver Electrical Connections 81
Maintenance 82
Clean the Exterior 82
Fuse Replacement 82
Manifold Replacement 84
Reset Controller Settings 85
Diagnostics 85
System 85
Measure 86
Control 86
Remote Interface 87
Troubleshooting 88
Error Codes 91
User-Replaceable Parts and Accessories 92

Introduction

The 2271A Automated Pressure Calibrator (the Product) precisely measures and controls pneumatic pressures in the range of -96.5 kPa to 20 MPa (-14.2 psi to 3,000 psi). Combine this functionality with the built-in Electrical Measurement Module (EMM) with HART capabilities to accomplish closed loop calibration on 4-20 mA devices such as smart transmitters and analog transmitters.

Additionally, use the Product to calibrate or test a wide variety of pressure measurement devices that include transmitters, gauges, and switches.

The Product features:

- Multi-language user interface (UI): English, Italian, Spanish, Russian, Portuguese, Simplified Chinese, German, Japanese, French, or Korean.
- PM200 Pressure Measurement Modules (PMMs) compatibility - The PMMs can be easily removed from the front of the Product to quickly change ranges. The Product can operate in gauge, absolute, or tare mode. See the *Measurement Modes* section.
- EM300 Electrical Measurement Module (EMM) - The EMM supplies 24 V dc loop power, measure mA, and measure V dc. The EMM has a built-in 250 Ω resistor that can be toggled on or off, eliminating the need to have an external resistor to enable HART communication. Basic HART communicator functions are also available when used with HART-capable transmitters. See the *HART Operation* section.
- Closed-loop Calibration Programs - Automated, built-in, for pressure devices that output mA signals from 0 mA to 30 mA.
- Dual test ports on top of the Product with hand-tight fittings for easy mounting of Units Under Test (UUTs). A reference port is also located on top of the Product for applications that require an atmospheric reference.
- Compatibility with the Fluke CPS-20M Contamination Prevention System that will keep moisture, dirt, oil, grease, and other contaminants from damaging the Product. See the *CPS Use* section. This allows for UUTs that are used in processing applications or oil applications to be calibrated using a gas medium.
- Compatibility with COMPASS for pressure.
- PC communication using Ethernet, USB, or a serial connection.

Contact Fluke Calibration

To contact Fluke Calibration, call one of the following telephone numbers:

- Technical Support USA: 1-877-355-3225
- Calibration/Repair USA: 1-877-355-3225
- Canada: 1-800-36-FLUKE (1-800-363-5853)
- Europe: +31-40-2675-200
- Japan: +81-3-6714-3114
- Singapore: +65-6799-5566
- China: +86-400-810-3435
- Brazil: +55-11-3759-7600
- Anywhere in the world: +1-425-446-6110

To see product information or download manuals and the latest manual supplements, visit Fluke Calibration's website at www.flukecal.com.

To register your product, visit http://flukecal.com/register-product.

Safety Information

A **Warning** identifies conditions and procedures that are dangerous to the user. A **Caution** identifies conditions and procedures that can cause damage to the Product or the equipment under test.

⚠⚠Warning

To prevent possible electrical shock, fire, or personal injury:

- **Read all safety information before you use the Product.**
- **Carefully read all instructions.**
- **Only assemble and operate high-pressure systems if you know the correct safety procedures. High-pressure liquids and gases are hazardous and the energy from them can be released without warning.**
- **Do not use the Product around explosive gas, vapor, or in damp or wet environments.**
- **Do not operate the Product with covers removed or the case open. Hazardous voltage exposure is possible.**
- **Use this Product indoors only.**
- **Do not put the Product where access to the mains power cord is blocked.**
- **Use only the mains power cord and connector approved for the voltage and plug configuration in your country and rated for the Product.**

- **Make sure the ground conductor in the mains power cord is connected to a protective earth ground. Disruption of the protective earth could put voltage on the chassis that could cause death.**
- **Replace the mains power cord if the insulation is damaged or if the insulation shows signs of wear.**
- **Use the Product only as specified, or the protection supplied by the Product can be compromised.**
- **Do not apply more than the rated voltage, between the terminals or between each terminal and earth ground.**
- **Do not touch voltages >30 V ac rms, 42 V ac peak, or 60 V dc.**
- **Do not use the Product if it operates incorrectly.**
- **Disable the Product if it is damaged.**
- **Do not use test leads if they are damaged. Examine the test leads for damaged insulation and measure a known voltage.**
- **Keep fingers behind the finger guards on the probes.**
- **Do not apply pressures over the rated pressure of any port of the Product.**
- **Use care when handling the sharp threads of the test ports.**
- **Use both handles to lift and carry the Product.**
- **Always wear safety glasses when working with pressurized equipment.**

Symbols

The symbols used in this manual and on the Product are shown in Table 1.

Table 1. Symbols

Symbol	Description
	WARNING. HAZARDOUS VOLTAGE. Risk of electric shock.
	WARNING. RISK OF DANGER.
	Consult user documentation.
	Certified by CSA Group to North American safety standards.
	Conforms to European Union directives.
	Conforms to relevant Australian EMC standards.
	Fuse
	Conforms to relevant South Korean EMC Standards.
	This product complies with the WEEE Directive marking requirements. The affixed label indicates that you must not discard this electrical/electronic product in domestic household waste. Product Category: With reference to the equipment types in the WEEE Directive Annex I, this product is classed as category 9 "Monitoring and Control Instrumentation" product. Do not dispose of this product as unsorted municipal waste.

Specifications

Safety specifications are located in the printed *2271A Safety Information.* Full specifications are located online in the *2271A Specifications.*

Calibration and Repair Information

Contact an authorized Fluke Calibration Service Center if the Product needs calibration or repair during the warranty period. See the *Contact Fluke Calibration* section. Please have Product information such as the purchase date and serial number ready when scheduling a repair.

Installation

Unpack the Product

The Product is delivered in a corrugated container with suspension packaging. An optional molded shipping case with custom foam inserts is also available. See *User-Replaceable Parts and Accessories*.

Remove the Product and its accessories from the shipping container and remove each element from its protective plastic bag. Check that all items listed in Table 2 are present and have no visible damage.

If it is necessary to reship the Product, use the original container. To order a new container, or any item listed in Table 2, contact Fluke Calibration. See the *Contact Fluke Calibration* section.

Table 2. Standard Equipment

Item	Model or Part Number
The Product	2271A
Mains Power Cord	See Figure 2.
PMM (Pressure Measurement Module)	See the *User-Replaceable Parts and Accessories* section.
EMM (Electrical Measurement Module)	4589968
2271A Safety Information	4584298
Test Port Adapters	See the *User-Replaceable Parts and Accessories* section.

Product Placement

⚠⚠Warning

To prevent possible electrical shock, fire, or personal injury:

- **Do not restrict access to the Product mains power cord. The mains power cord is the mains disconnecting device. If access to the power cord is inhibited, a properly-rated accessible mains disconnecting switch must be provided within reach as part of the installation.**
- **Use good lifting practices when lifting or moving the Product. The Product is an unbalanced load and can weigh as much as 20 kg (44 lb).**

Install the Product on a flat, stable surface at a convenient height.

When connecting to a UUT, minimize the distance between the Product and the device or system under test to enhance control performance and reduce pressure settling times. When only one test port is being used, the other must be closed with the hand-tight cap supplied with the product. See the *User-Replaceable Parts and Accessories* section for part numbers. See Figure 1.

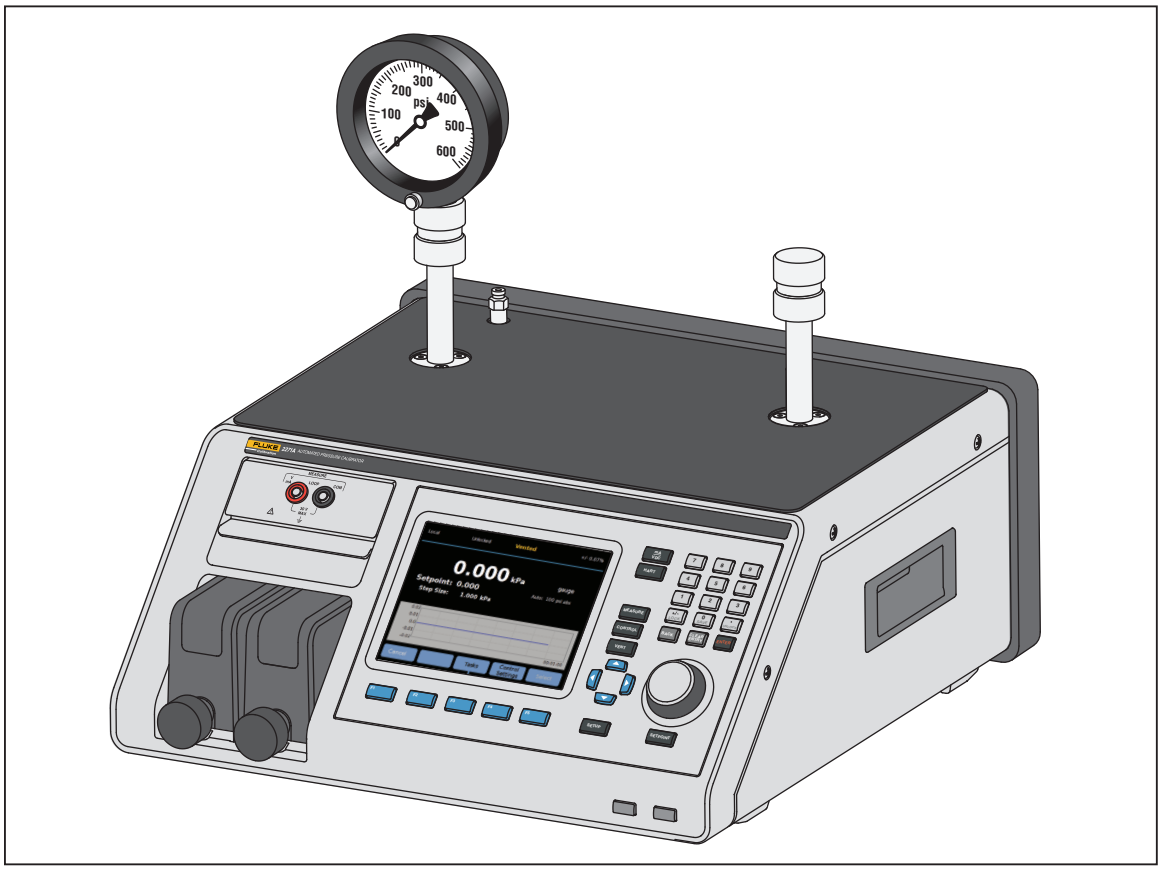

hwr024.eps

Figure 1. Single UUT Use

For installation, the Product requires:

- An electrical power source. See *Mains Voltage.*
- A continuous, regulated pressure supply of clean, dry, non-corrosive gas at the Product's maximum control pressure +10 % or 70 kPa (10 psi), whichever is greater, to be connected to the SUPPLY port on the Product.
- If control pressures <20 kPa (3 psi) gauge are necessary, use a vacuum source of 7 kPa (1 psi) absolute and with displacement of at least 90 lpm (3 cfm).

Mains Voltage

⚠⚠Warning

To prevent possible electrical shock, fire, or personal injury:

- **To prevent shock hazard, do not put the Product where access to the mains power cord is blocked.**
- **Use only the mains power cord and connector approved for the voltage and plug configuration in your country and rated for the Product.**
- **Make sure the ground conductor in the mains power cord is connected to a protective earth ground. Disruption of the protective earth could put voltage on the chassis that could cause death.**
- **Replace the mains power cord if the insulation is damaged or if the insulation shows signs of wear.**

The Product requires mains voltage ranging from 100 V ac to 240 V ac with frequencies from 47 Hz to 63 Hz.

The Product comes with the appropriate line power plug for the country of purchase. Refer to Figure 2 for the mains line power plug types available from Fluke Calibration.

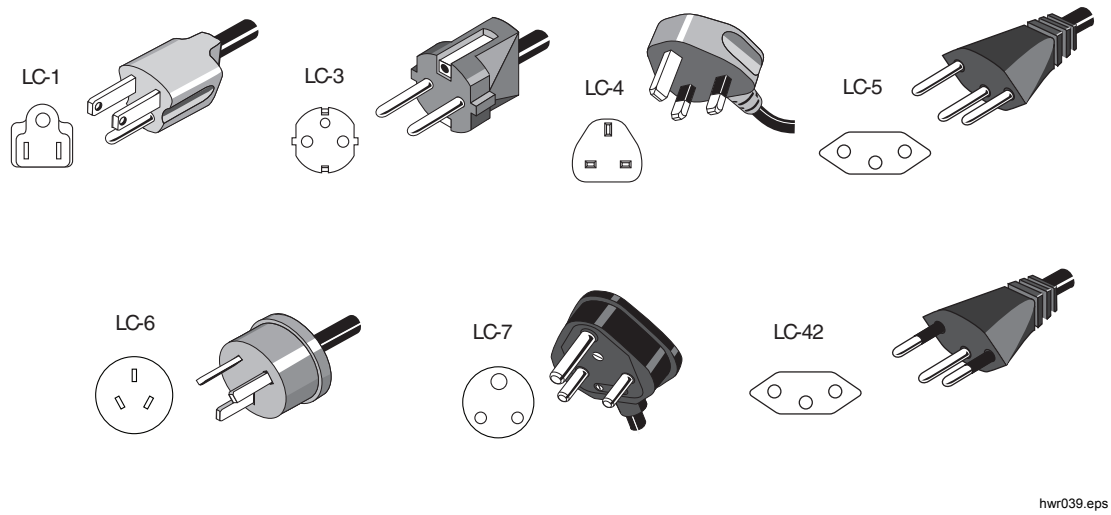

Type	Fluke Calibration Option Number
North America	LC-1
Universal Euro	LC-3
United Kingdom	LC-4
Switzerland	LC-5
Australia	LC-6
South Africa	LC-7
Brazil	LC-42

Figure 2. Available Mains Power Cord Types

Module Installation

Note

Before you install a new pressure module, update the Product to the latest firmware.

The EMM (located on the top left of the Product front panel) is installed at the factory. To remove the EMM for service, lift up and pull the module finger tab outward to slide the EMM out of the Product.

The PMMs (located on the bottom left of the front panel) are delivered in a separate box and can be installed with the Product turned on or off. The PMMs can be installed in any order without the need to plug any of the unused slots. The Product detects the PMM information when installed and shows the information in the Modules Information screen in the Setup Menu. Information such as the pressure range of each module is shown on the display after it is installed.

To install the PMMs, see Figure 3:

⚠Caution

To prevent damage to the sensors inside the modules, do not drop the modules.

To prevent contamination of the controller and to ensure proper operation, the PMM bay must be wiped out regularly to prevent dirt, dust, and oils from entering the pneumatic system, especially in dirty or dusty environments. To clean the bay, wipe it with a cloth that is lightly dampened with water or mild detergent. Do not use aromatic hydrocarbons, chlorinated solvents, or methanol based fluids.

1. Remove the PMM from its shipping box.
2. Remove the protective plastic cover from the PMM test and reference port.
3. Confirm that the test and reference port O-rings are properly installed on the module and are not torn or damaged. Additional O-rings are located in the box in case they become lost or damaged.
4. Each PMM has a slot on the bottom that fits into the track on the bottom of the module compartment on the front of the Product. Slot 1 is on the left. Slot 2 is on the right. Line up the track with the slot and slide the PMM into the compartment until it stops.
5. Turn the knob on the PMM clockwise until it clicks once to secure it.

Note

To prevent accidental over-tightening that can damage the module, the PMM knob is a torque-limiting knob that slips once the proper amount of torque is applied.

6. Repeat this procedure for any other PMMs and Barometric Reference Modules (BRMs).

hwr022.eps

Figure 3. Installed EMM and PMM Modules

Barometric Reference Module (BRM)

For absolute measurements, a Barometric Reference Module (BRM) must be installed. When a BRM is installed, Absolute Measurement mode becomes available. See the *Measurement Modes* section. Install the BRM like a PMM into any open module slot.

Turn on the Product

To turn on the Product, toggle the main power switch, located on the left-rear of the Product (when looking at it from the back) to I. When the Product is turned on, it takes approximately 50 seconds to complete its power-up process and cannot be used during this time.

Note

Push ⏻ at any time to put the Product into Standby. When in Standby, the Product stays powered on and keeps the internal components warm but turns off the display and remote communication.

For the Product to perform to specifications, a 15-minute warm-up period is required after the Product is turned on or a new PMM is installed. Additional ambient temperature acclimation can be required.

Main Screens

After the power-up process, the Product shows one of these Main screens, depending on which mode the Product is in.

- Pressure control mode - pressure measurement screen with a graph
- mA/VDC Mode - mA/v dc measurements screen
- HART Mode - HART connection screen.

Use the Main menu to access functions and other menus. Refer to Tables 3, 4, and 5 for information about each Main screen item.

Table 3. Main Screen (mA/VDC)

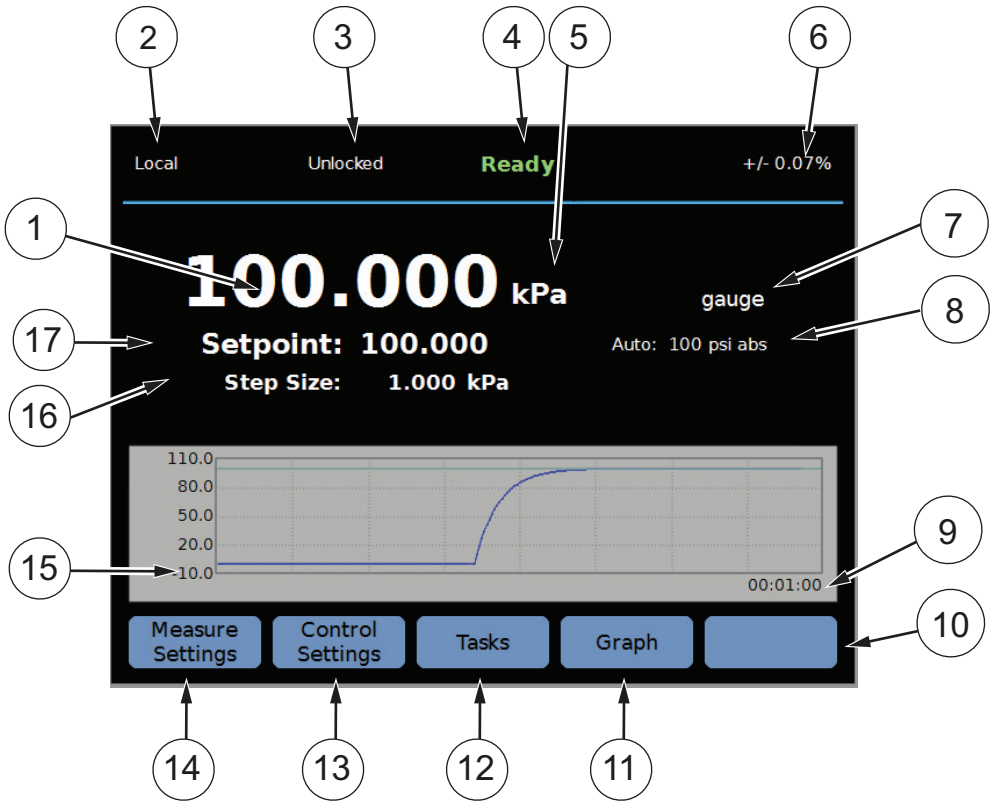

hwr015.eps

Item	Indicator/Name	Function
1	Pressure Measurement	Shows the pressure measured by the active PMM.
2	Local / Remote	Shows when the Controller is under remote operation by a PC. See the *2271A Remote Programmers Guide* available on the Fluke Calibration website for more information. *Note* *When the Product enters Remote mode, the front panel is automatically locked to prevent accidental changes. See* 3.
3	Locked/Unlocked	Shows the unlocked and locked status of the UI. Push and hold [+/- LOCK] to lock the UI. The field shows **Locked** and the UI does not function. Push and hold [• UNLOCK] to unlock the UI. The field shows **Unlocked** and the UI responds to user input.

Table 3. Main Screen (mA/VDC) (cont.)

Item	Indicator/Name	Function
④	Measurement Indicator	**Not Ready** – Indicates unstable pressure that is not within stability limits. The Product cannot make a measurement at this time. **Ready** – Indicates stable pressure that is within stability limits. The Product can make a measurement at this time. **Vented** – This is shown when the Product is vented to indicate that the Product can now make an ATM or 0 psig measurements. See the *Pressure Measurement* section for more information.
⑤	Unit of Measure	Shows the unit of measure.
⑥	Measurement Uncertainty	Shows the measurement uncertainty based upon the uncertainty of the currently-selected PMM based on the settings in the Uncertainty Setup menu.
⑦	Measurement Mode	Shows the active measurement mode and when selected, opens a menu to change the measurement mode. Modes supported - Gauge, Absolute, and Tare. See the *Unit and Custom Units* section. See the *Measurement Modes* section.
⑧	PMM Selection Mode and Current Range	Shows the PMM that is in use. From the Measure Setup menu, manually select a PMM or put the Product into Automatic selection or Fast mode. See the *Module Selection* section.
⑨	Time Scale	Time scale of the graph. Select the graph and use the **Zoom In** and **Zoom Out** softkeys to adjust the time scale.
⑩	Softkey Indicators	The five icons at the bottom of the display correspond to the softkeys directly below the display. Softkey functions are defined by the labels that show on the display above the softkey during operation. Softkey labels and other display text are shown in this manual in bold type, for example, **Tasks**.
⑪	**Graph**	Shows a graphic representation of the current measurement. When in mA/VDC mode, this section of the display shows the mA/VDC measured value.
⑫	**Tasks**	Menu that gives quick access to the pre-programmed tasks. See the *General* Tasks section.
⑬	**Control Settings**	When this mode is selected, the Product actively controls to a target pressure. The Control Settings mode relies on the settings in the Control Setup menu. To access the menu, push this softkey. See the *Pressure Control Settings* section.
⑭	**Measure Settings**	The Measurement Setup menu contains all options and parameters related to how the Product measures pressure. See the subsequent sections for more information on each setting within this menu. See the *Measurement Setup* section.
⑮	Step Size	Adjust the step size amount. A step is a predetermined value that lets you increase or decrease pressure in large amounts.
⑯	Setpoint	Shows the current target pressure value and opens a menu to set a target pressure. See the *Set Target Pressure (Setpoint)* section.

Note

Some display items were explained in the previous table.

Table 4. Main Screen (HART)

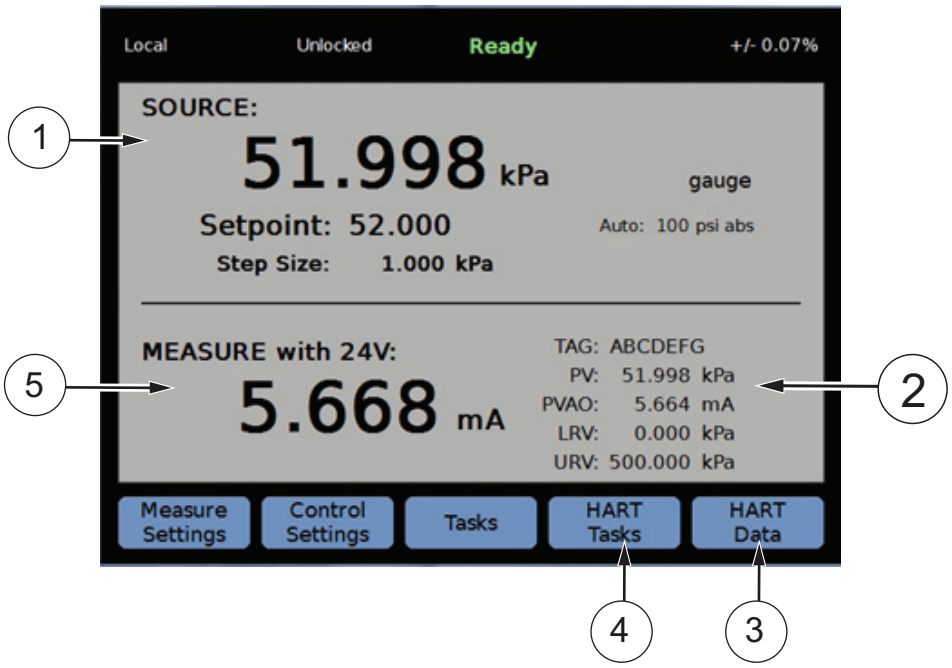

hwr016.eps

Item	Indicator/Name	Function
1	Source Measurement indicator	Shows the source pressure measured by the active PMM.
2	HART Basic Data	• TAG (Model number and Tag ID) • PV (Primary Variable, also known as or unit of measure) • PVAO (digital representation of the Analog Output) • LRV (Lower Range Value) • URV (Upper Range Value)
3	**HART Data**	Push this softkey to see data for the HART-enabled device. See the *HART Operation* section for more information.
4	**HART Tasks**	Push this softkey to see the HART Tasks screen. See the *HART Operation* section for more information.
5	HART Measurement	Shows the measured value from the HART-enabled device.

Table 5. Graph

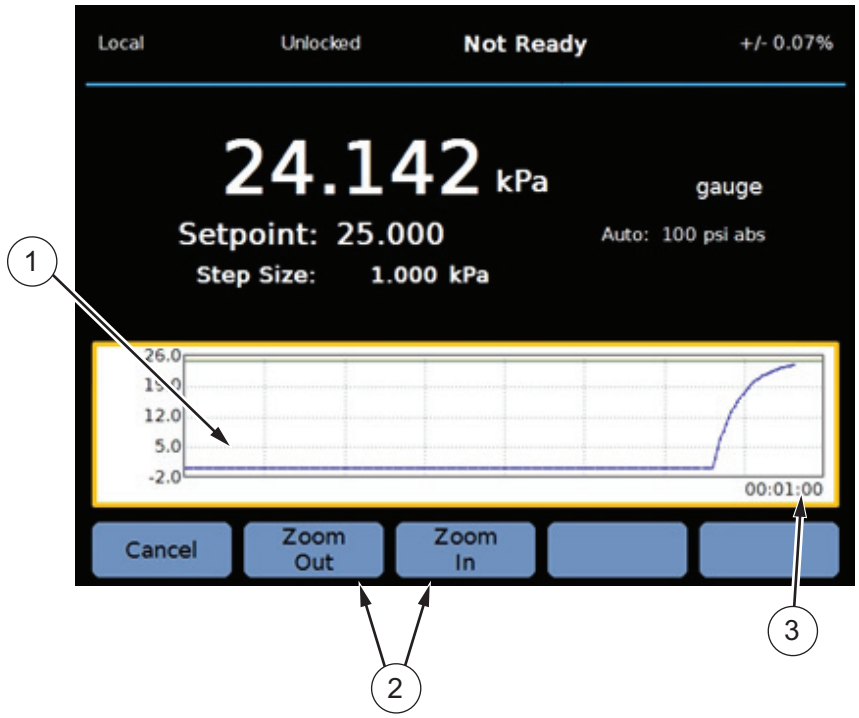

hwr014.eps

Item	Indicator/Name	Function
1	Graph	Scalable graph that shows the current pressure and historical pressure behavior for up to 96 hours of elapsed time. This graph is an informational tool only and cannot be saved.
2	Zooms	Magnifies or shrinks the graph by adjusting the time scale.
3	Time Scale	Shows the time scale of the graph.

Setup Menu

When the Product is first used, set the user preferences from the Setup menu. To open the Setup menu, push SETUP.

Note

Once inside these menu structures use the cursor keys or Jog Knob to select menu items.

The Setup menu leads to these submenus:

Measure Setup – This menu has options and parameters for pressure measurement. See the *Measurement Setup* section for detailed information on each menu item.

Tasks – This menu contains selections to configure and run pre-programmed functions (tasks). See the *General Tasks* section for detailed information on each menu item.

HART Tasks – This menu is only active when the Product is in HART mode. Push HART on the front panel to access this menu. The menu contains these selections:

- **Trim PV Zero**
- **Trim Current Output**
- **Trim by Re-Range**
- **Write LRV and URV**
- **HART Diagnostics**
- **Write PV Unit**
- **Write Tag**
- **Write Message**
- **Write Description**

Module Information - This shows the PMM configuration and can be used to make selections regarding which PMMs and mode to use. See *Module Selection* for detailed information on each menu item.

Control Setup - This menu contains options and parameters for pressure control. See the *Pressure Control Settings* section for detailed information on each menu item.

Instrument Setup - This menu contains general instrument options and parameters. See the *Instrument Setup Menu* section for detailed information on each menu item.

Diagnostic - This menu contains system self-tests, that include:

- **System** – Shows information about the Test Port Vent Value, Ref Port Vent Value, and Pressure Switch Input.
- **Measure** – Shows PMM information in real time including PMM, Temperature, Pressure, whether the Test Valve and Ref Valve is open or closed. A **Pneumatic Self Test** can also be run from this location.
- **Control** – Shows **Port Pressure**, **Control Module**, and **Control Coefficient information**. An **Autotune** feature is available from this location to tune the PCM.
- **Remote Interface** – Use this menu to access **RS-232**, **USB**, or **Ethernet** information.

Instrument Setup Menu

The Instrument Setup menu (SETUP **>Instrument Setup**) includes these submenus:

- Instrument Settings
- Remote Port
- External 24V
- CPS
- Pressure Uncertainty
- About This Instrument
- Restore Factory Default

Instrument Settings Menu

To set user preferences, from the Instrument Setup menu, select the **Instrument Settings** tab.

The sections of the Instrument Settings menu are explained in Table 6.

Note

*A password is required to change the **Date/Time** and **Security** parameters. See* Security *in Table 6 below for information about how to change the default password.*

Table 6. Instrument Settings Menu

Tab	Description
Language	Select the **Language** tab to change the UI language. Options are **English**, **Italian**, **Spanish**, **Russian**, **Portuguese**, **Simplified Chinese**, **German**, **Japanese**, **French**, or **Korean**.
Date/Time	To change the format of the date, select the **Format** tab, select the format and select **Exit**. Use **MM/DD/YYYY**, **DD/MM/YYYY**, or **YYYY-MM-DD** (M= Month, D=Date, Y=Year). To change the date and time, select the parameter to change (Month, Day, Year) and use the numerical keypad to key in the new value. Push ENTER to store the value(s).
Display	Use this menu to adjust aspects of the Display. Select the **Display** tab to get to the **Brightness** and **Screen Timeout** parameters. For display brightness, select the **Brightness** tab and use the keypad to adjust the percentage. The screen can also be set to turn off (timeout) after a certain amount of time. Select the arrow on the Screen Timeout tab and choose **1**, **5**, **10**, **15**, or **30 minutes**. **Never** can also be selected.
Decimal	Use this tab to specify a decimal separator for your region, either “.” or “,”.

Table 6. Instrument Settings Menu (cont.)

Tab	Description
Screen Capture	The Product can save screen captures. When the Product is connected to a PC using a USB cable, the Product shows as a disk drive on the PC. Screen captures can be copied from the Product to the PC. To save a screen, push and hold 0 SAVE.
Change Password	A security password protects the integrity of Product calibration and must be entered before new calibration constants can be saved to non-volatile memory. The password also protects the ability to set the date for the internal real-time clock. If the password has not been entered, the Product is secured. Once the password is entered, the Product is unsecured. The Product secures itself when it is reset or when the Setup menus are closed. The Product can be unsecured at any time over the remote interface with the CAL_SECURE command and by entering the password. The Product prompts for the password to unsecure the Product before it can accept new values to be eventually secured. The password contains 1 to 8 digits and is factory set to **2271**. To change the password: 1. Select SETUP **>Instrument Setup>Instrument Settings>Change Password**. The Product prompts for the current password. 2. Use the numeric keypad to enter the current password. 3. To change the password over the remote interface use the CAL_PASSWD command. *Note* *If the new password is lost, contact Fluke Calibration Customer Service for a new password.*
Clear All Files	This deletes all files saved in the internal mass storage disk. Files include screen captures and report files created by the program of transmitter or pressure device.

Remote Port Menu

Use the Remote Port menu to change or view the USB, RS-232, Ethernet port settings, and Emulation Mode explained in Table 7.

Table 7. Remote Port Menu

Tab	Description
USB Setup	Use this menu to change the remote interface (Remote IF) to be from a PC or terminal. The End of Line character (EOL) can be specified as Carriage Return (CR), Line Feed (LF), or Carriage Return and Line Feed (CRLF).
RS-232 Setup	Use this menu to specify the RS-232 communication parameters. The editable parameters are: • Data Bits • Stop Bits • Flow Control • Parity • Baud • EOL • Remote IF Select **Defaults** to reset the RS-232 port to its default values.
Ethernet Setup	Use this menu and the numeric keypad or PC keypad to specify or edit these parameters: • Host Name • IP Address • Gateway • Subnet Mask • DHCP (ON or OFF) • Remote IF (interface) • Port

External 24V Menu

Use this menu to select which driver port on the rear of the Product is in use. The choices are **DRV1 – DRV4**. See the *Configure the Drivers* section for more information.

CPS Menu

Use this tab to choose if a Contamination Prevention System (CPS) is installed. See the *Contamination Prevention System (CPS)* section for more information.

Pressure Uncertainty Menu

Use this menu to view or change uncertainty parameters. Editable parameters are:

- Head Height Uncertainty
- Include Control Uncertainty
- Additional Uncertainty Component 1
- Additional Uncertainty Component 2
- Show Uncertainty

Select **Defaults** to restore the default values.

Note

The Uncertainty menu only shows the pressure uncertainty and does not account for the electrical measurement. The Uncertainty menu has a field that allows the user to manually add the electrical module uncertainty.

About this Instrument

This page of the menu is for information purposes only. The information on the page includes:

- Model Number
- Serial Number
- Revision (of the Firmware)
- User Interface (version)

Front-Panel Features

This section is a reference for the front and rear panel features and the User Interface (UI). The front-panel features (including all controls, displays, indicators, and terminals) are shown and explained in Table 8.

Table 8. Front-Panel Features

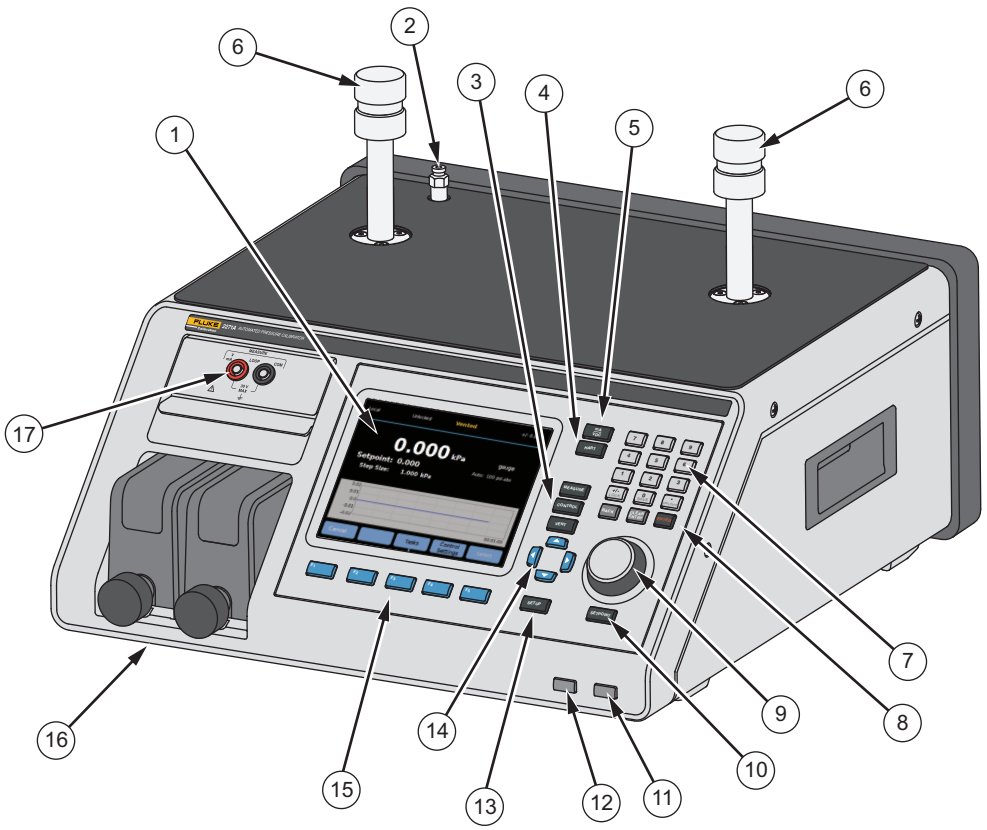

Item	Description
1	The color display shows the measured pressure, control setpoint, and other active conditions and messages. The display provides controls not available with the keys alone.
2	Reference Port
3	MEASURE – Push to show the system pressure value. CONTROL – Push to set system pressure to setpoint value. VENT – Push to vent pressure in the system.
4	HART – Push to connect to a HART device. See the *HART Operation* section.
5	mA VDC – Push to enable the mA measurement menu. When the menu is opened, additional options are available to toggle 24 V loop power and to switch between measuring mA and dc voltage. Note that when the menu is opened, 24 V loop power is disabled.

Table 8. Front-Panel Features (cont.)

Item	Description
6	Test ports which can be connected with UUTs or a test station (with caps). The Product can be equipped with two different types of test ports: P3000 or M20x1.5. The Product comes with a full set of adapters.
7	Numbered keys to change numerical values on the Product user interface. To enter a value, select an editable section of the display and then change the numerical values with the numbered keys. Push [ENTER] to accept and set the entry. For example, to set an output of 100 psi, push [SETPOINT] and then push [1] [0 SAVE] [0 SAVE] [ENTER]. *Note* *Use [+/- LOCK] to give an entry a positive or negative value, but if this button is pushed and held, it will lock the front control panel. Push [• UNLOCK] to unlock the control panel.* *The Product controls pressure when in the Control mode only. See the* Control Modes section *for more information.*
8	[BACK] – As a new value is entered with the numbered keys, push this button to delete the last key entry. [CLEAR ENTRY] – Push to clear the value entry in progress. [ENTER] – Push as the final step when inputting a numerical value.
9	When on the main menu, use the Jog Knob to make fine adjustments to the setpoint value. When turned, the value changes by the least significant digit based on the measurement resolution refer to the *Measurement Resolution* section for more information. Jogging the pressure with the Jog Knob adjusts the Setpoint value in any mode but will only actively change the applied pressure while in Control mode. Turn counter-clockwise to decrease pressure or clockwise to increase. The Jog Knob can also be used to quickly navigate menus.
10	[SETPOINT] – Push to quickly enter a pressure value to control to.
11	[⏻] – Push to put the Product into standby mode. In standby, the display is off and the keys are disabled. Standby mode also disables remote operation. See the *Turn on the Product* section.
12	[ABORT] – Push to immediately vent the system pressure and stop all pressure control. In addition, remote communication is stopped and the Product enters a safety mode until manually deactivated. See the *Vent and Abort* section for more information.
13	[SETUP] – Push this button to enter the Setup Menu.
14	[◀][▶][▲][▼] – Use these arrow buttons to move the cursor through the UI. As the different UI items are highlighted, the softkey [F5] becomes active and turns to **Select**. The Jog Knob can also be used for navigation as well.

Table 8. Front-Panel Features (cont.)

Item	Description
15	F1 F2 F3 F4 F5 The functions of these softkeys are defined by the labels that appear on the display above each softkey during operation. Softkey labels and other display text are shown in this manual in bold type.
16	Pressure Measurement Modules (PMMs)
17	EMM module that measures mA, V dc, and supplies 24 V loop power. This module is also HART equipped.

Rear-Panel Features

Rear-panel features (including all terminals, sockets, and connectors) are shown in Table 9.

Table 9. Rear-Panel Features

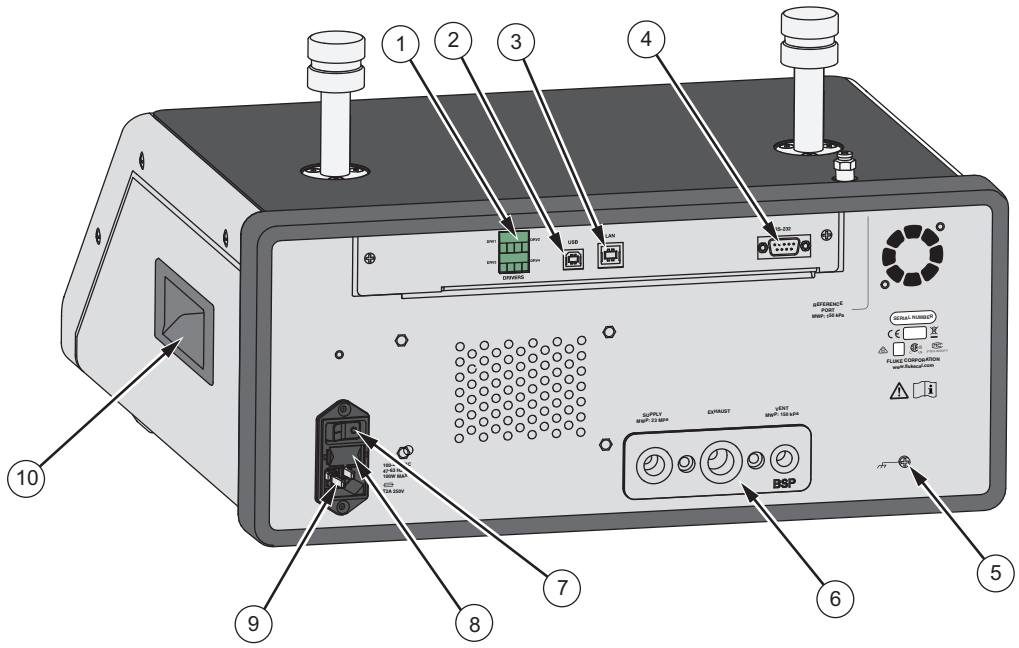

hwr002.eps

Item	Description
1 24 V External Drivers	The external drivers are 24 V dc outputs that can be individually controlled in the Setup menu. Drivers also operate specific accessories such as the Contamination Prevention System (CPS). See the *Contamination Prevention System (CPS)* section. When an accessory is connected and turned on in the Setup menu, the software automatically reserves the use of that driver for the accessory and changes the state of the driver as necessary to operate the accessory. For more information on the drivers. See the *External Driver Communication* section.
2 Rear USB Port	USB 2.0 remote operation interface – When this port connects the Product to a PC, the PC sees the Product as a serial COM port or external drive. Screen captures and test results can be moved from the Product to the PC. Refer to the *Remote Programmers Manual* for more information on remote operation.
3 Ethernet Connector	100 Base/T Ethernet Connector for Remote Operation Interface. Refer to the *Remote Programmers Manual* for more information on remote operation.
4 RS-232 Connector	RS-232 remote operation interface. Refer to the *Remote Programmers Manual* for more information on remote operation.

Table 9. Rear-Panel Features (cont.)

Item	Description
5 Manifold/Pressure Connection	All of the pressure connections are made on the rear panel through this replaceable manifold. The manifold comes in two localized versions: NPT and BSP. See the *Rear-Panel Manifold Pressure Connections* section for more information. See *the 2271A Specifications online* or pressure limitations for each port.
6 Master ON/OFF Switch	The Master ON/OFF switch supplies and disconnects mains power to the unit. This switch must be in the ON (I) position before the power button on the front panel will function.
7 Fuse Holder	Line Power Fuse. Fuse replacement for fuse rating information and the fuse replacement procedure.
8 AC PWR INPUT Connector	A grounded male three-prong connector that accepts the mains power cord. See the *Mains Voltage* section.
9	Handle

Operation

This section explains the pressure control settings of the Product.

Pressure Control Settings

The product has these operating modes to control pressure: Control, Measure, and Vent.

Control Mode – When in Control mode, the Product actively controls pressure as defined by the Setpoint and will keep the pressure near the Setpoint per the active control mode. See the *Control Modes* section. Control is the only mode where the Product actively controls pressure. The setpoint value can be changed in any of the three modes, but the Product is idle until CONTROL is pushed.

Vent Mode – When in Vent mode, all pressure on the test port is vented to atmosphere.

Measure Mode – When in Measure mode, the Product is holding pressure and pressure control is idle. This mode provides a method to take a measurement without control noise.

Set Target Pressure (Setpoint)

Target pressure (Setpoint) is the numerical value of the pressure that the Product controls on command. Enter the Setpoint number into the Setpoint field while in any of the operation modes (Measure, Control, and Vent). The Product controls pressure to the Setpoint in Control mode only. While in the Control mode, if a new Setpoint number is entered and accepted, the Product immediately controls to the Setpoint. Once at the Setpoint, the Product then uses the active Control mode to keep the pressure between the upper and lower limits. See the *Control Modes* section.

Note

Changing the pressure with the Jog Knob adjusts the Setpoint value in any mode but will only actively change the applied pressure while in Control mode. See the subsequent section for more information on jogging pressure.

To set a setpoint pressure:

1. Push SETPOINT to activate the field.
2. Use the numeric keyboard to enter the number.
3. Push ENTER to accept. It is not necessary to push CLEAR ENTRY to enter a new value, just type in the new value and it overwrites the previous value.

Note

Pressure will not change until **Control** *is activated.*

Step Pressure Up or Down

Use the Step function to change the pressure Setpoint. The Step function is used primarily when taking pressure steps in equal pressure increments and is only available in Control mode. All step controls are accessed in the SETPOINT menu. The size of the pressure step is user-defined in the Control Settings menu. To modify the step size, push SETPOINT, select **Step Size**, and use the keypad to enter a step value. Then use the up and down arrows to step that amount.

Jog Pressure

Use the Jog function when calibrating mechanical gauges such as a dial gauge and to change the pressure until the mechanical gauge indicates a cardinal point. The higher resolution Calibrator is then read to determine the actual pressure value when the mechanical gauge indicates a cardinal point. To jog the pressure, turn the Jog Knob clockwise or counter-clockwise to increment or decrement the pressure by the lowest significant digit of the active measurement resolution. For example, for a measurement resolution of 0.01 psi, turning the Jog Knob increments the pressure by 0.01 psi per knob detent.

Vent and Abort

Push VENT to completely vent the applied pressure at a controlled rate. When VENT is pushed, the Product prompts for confirmation before venting to prevent accidental venting or accidently canceling tests. If VENT is pushed when a test is in progress and the dialog is confirmed, the test immediately stops and the Product vents all pressure in the system.

The Product has an automatic pressure-relief function called Auto Vent that releases pressure if it exceeds upper or lower pressure limits. See the *Auto Vent* section for more information on this feature.

For emergency pressure relief, push ABORT to immediately vent all pressure from the system and cancel any program or task in progress without confirmation. Additionally, the Product enters safety mode and disconnects remote operation. The Product stays in this mode until the on-screen dialog to exit safety mode is confirmed.

⚠Caution

To avoid equipment damage, use ABORT for emergency situations only. Abort vents pressure as quickly as possible without restriction. This rate of pressure drop could damage some sensitive UUTs.

Pressure Measurement

An indicator on the top of the display (also known as the Ready indicator) indicates when pressure is stable enough to be measured. See Table 3 for a list of measurement indicators and their definitions. For the indicator to change to “Ready”, the rate of pressure change must be within the stability limits and the pressure must be inside the ready tolerance range for the active pressure control mode.

Rear-Panel Manifold Pressure Connections

The Product comes with one of these types of manifolds installed:

- NPT
- BSP

The type of manifold is marked on its lower right corner. Table 10 lists the different manifolds and port sizes. Manifold installation is explained in the *Manifold Replacement* section.

Table 10. Rear-Panel Manifolds

Manifold	SUPPLY	EXHAUST	VENT
NPT [1]	1/4 inch NPT	3/8 inch NPT	1/8 inch NPT
BSP [2]	1/4 inch BSP	3/8 inch BSP	1/8 inch BSP

[1] Requires the use of PTFE tape on the male adapter to ensure a good seal.
[2] Bonded seal is required to ensure a good seal.

An accessory connection kit can be purchased and supplies the common adapters used to connect to the manifolds. Contact Fluke Calibration for more information. See the *Contact Fluke Calibration* section.

SUPPLY Port

The pressure SUPPLY port must be connected to a regulated source of clean, dry air or nitrogen as directed in *Specifications*. Fluke Calibration recommends that tubing be at least 3 millimeters (1/8 inch) inside diameter and properly rated for the pressure.

Connect the pressure supply to the SUPPLY port on the manifold on the rear panel of Product. The SUPPLY port connection is 1/4 inch NPT or 1/4 inch BSP. Use a pressure-connecting hose or tube of the appropriate pressure rating.

The supply pressure should be equal to the greater of 70 kPa (10 psi) or 110 % of the maximum Product control pressure. The supply pressure should never exceed 23 MPa (3300 psi). Lower gas pressure sources can be used, but should exceed the maximum desired test output pressure by at least 10 %.

⚠Caution

To prevent damage to the system, make sure to select the correct size adapter fitting with the correct thread type. Ensure that all hardware used is rated to an adequate working pressure, and that all equipment is in proper working order (for example, no cracks or stripped threads).

To prevent damage to the Product, be sure to connect the pressure supply to the SUPPLY port. Connecting to another port can damage the Product.

EXHAUST Port (Vacuum Pump if Required)

The EXHAUST port can be left open to atmosphere under most conditions. A vacuum pump is required to control pressure below 20 kPa (3 psi) gauge. Tubing should have a minimum inside diameter of 6 millimeters (1/4 inch). In confined areas, pipe the EXHAUST port outside to prevent an accumulation of nitrogen. It is acceptable to add tubing to the EXHAUST port to reduce noise. Do not block the exhaust tube.

⚠Caution

To prevent damage to the Product:

- **Never connect a pressure supply to or block the Product EXHAUST port.**
- **To avoid building up pressure on the EXHAUST port or on a vacuum pump connected to the EXHAUST port, the vacuum source should either be continuously ON or the EXHAUST port should be bypassed to atmosphere when the vacuum source is OFF. Pressure is exhausted out of the exhaust port when controlling down in pressure.**

When controlling down in pressure, the Product exhausts gas through the EXHAUST port. The flow of this gas can be greater than what the vacuum pump can support. When working at higher pressures, Fluke Calibration recommends that the user turn off the vacuum pump. The pump should be equipped with an auto-vent valve.

VENT Port

The VENT port ties the internal volume to atmosphere when the Product is vented.

Note

Leave the VENT port open to atmosphere to ensure proper Product operation.

Test Ports

There are two test ports on top of the Product. Use these ports to connect UUTs to the Product, CPS, or a P5532 filter.

HC20 and P3000 test port types are available. Choose the types of ports necessary for the application. The P3000 and HC20 adapters and connections are: M14, M20, 1/8 in, 1/4 in, 3/8 in, 1/2 in NPT and BSP. See Figure 4.

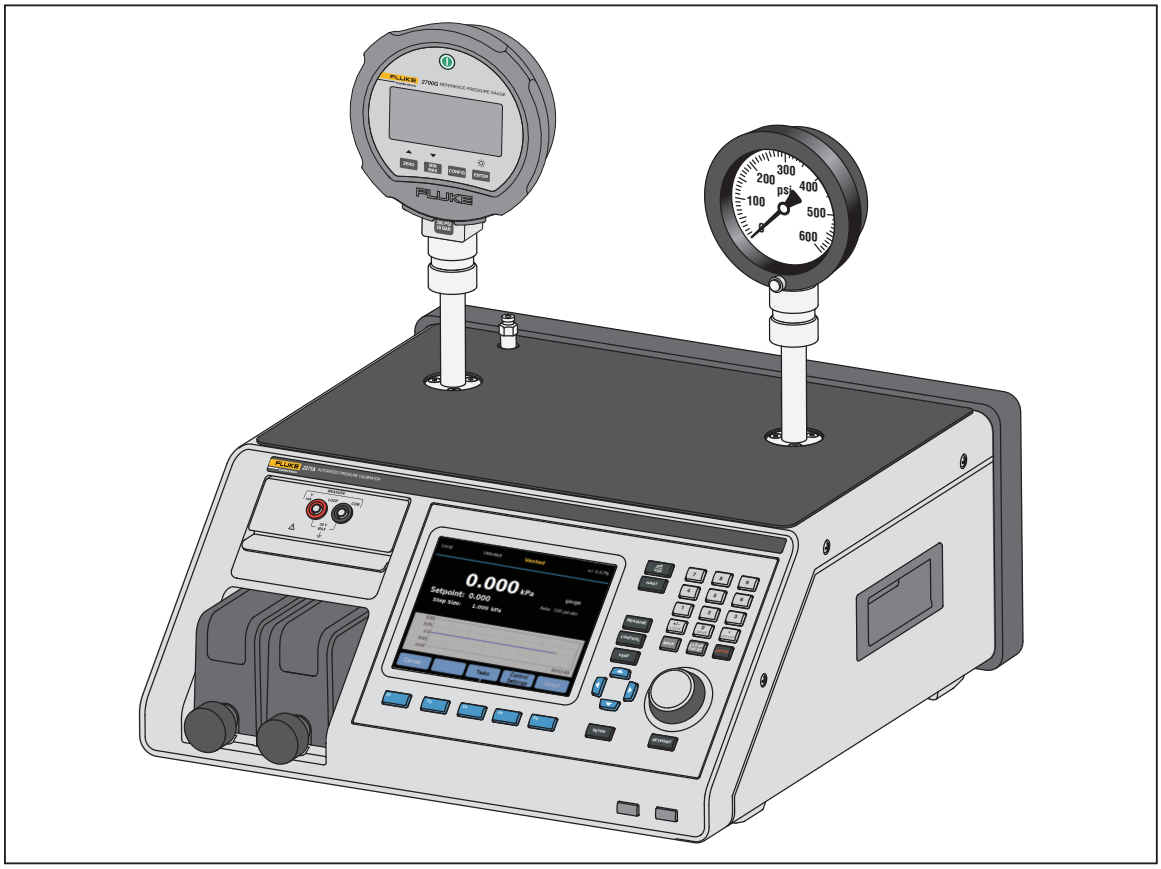

hwr025.eps

Figure 4. Two Gauge Connection

Pressure instruments and UUTs are connected to the test ports on top of the Product. Depending on the configuration of the Product ordered, one of two hand-tight test port types are installed: P3000 or HC20. These are hand-tight fittings that include necessary adapters to connect to most common size NPT, BSP, and metric female test ports found on analog gauges and transmitters. For a list of adapters, refer to Table 2 and for replacement adapters, contact Fluke Calibration. When the HC20 style test port is used, a gauge with a male M20 connection can be connected directly to the test port without the use of an additional adapter.

To prevent oils, grease, solvents, and water that could be present in a UUT from contaminating the Product, a Contamination Prevention System (CPS) is available for use with the Product. The CPS sits on a bench next to the product and inside of a test stand that provides a sturdy platform to test pressure instruments and devices. The CPS connects directly to a single Test port (the other test port must be capped with a hand-tight cap). For more information and instructions on how to install and service the CPS. See the *Contamination Prevention Accessory (CPS)* section.

Note

Excessive leaks in the test volume affect control stability and possibly cause measurement errors in the UUT. Use the Leak Test task to check for leaks in the system prior to running a test.

⚠Caution

To prevent damage to the Product, when the Product is connected to a system with liquid contaminants, take proper precautions to purge the system and test line. The automated purge task helps purge the liquid from the UUT. Not doing so can cause Product contamination and result in a need for non-warranty service.

Note

Minimize the length of the test connection tubing to enhance control performance and reduce pressure setting time.

The Product pressure control will not operate properly if there are excessive leaks in the test system. The maximum acceptable leak rate for optimal automated pressure control operation and to ensure in tolerance measurements with default pressure control parameters is ±0.5 % of set pressure/minute. In DYNAMIC CONTROL mode, to handle higher test system leak rates, ready tolerance can be increased from the user interface.

HC20

The HC20 test port has an M20X1.5 female thread and an O-ring inside. It is quick and easy to connect UUTs which have M20 X 1.5 male threads. The M20 test ports have many varied adapters, which are used to connect different UUTs with other male threads, such as NPT or BSP M14 X 1.5. These adapters seal on an O-ring and thus do not require PTFE tape. See Figure 5.

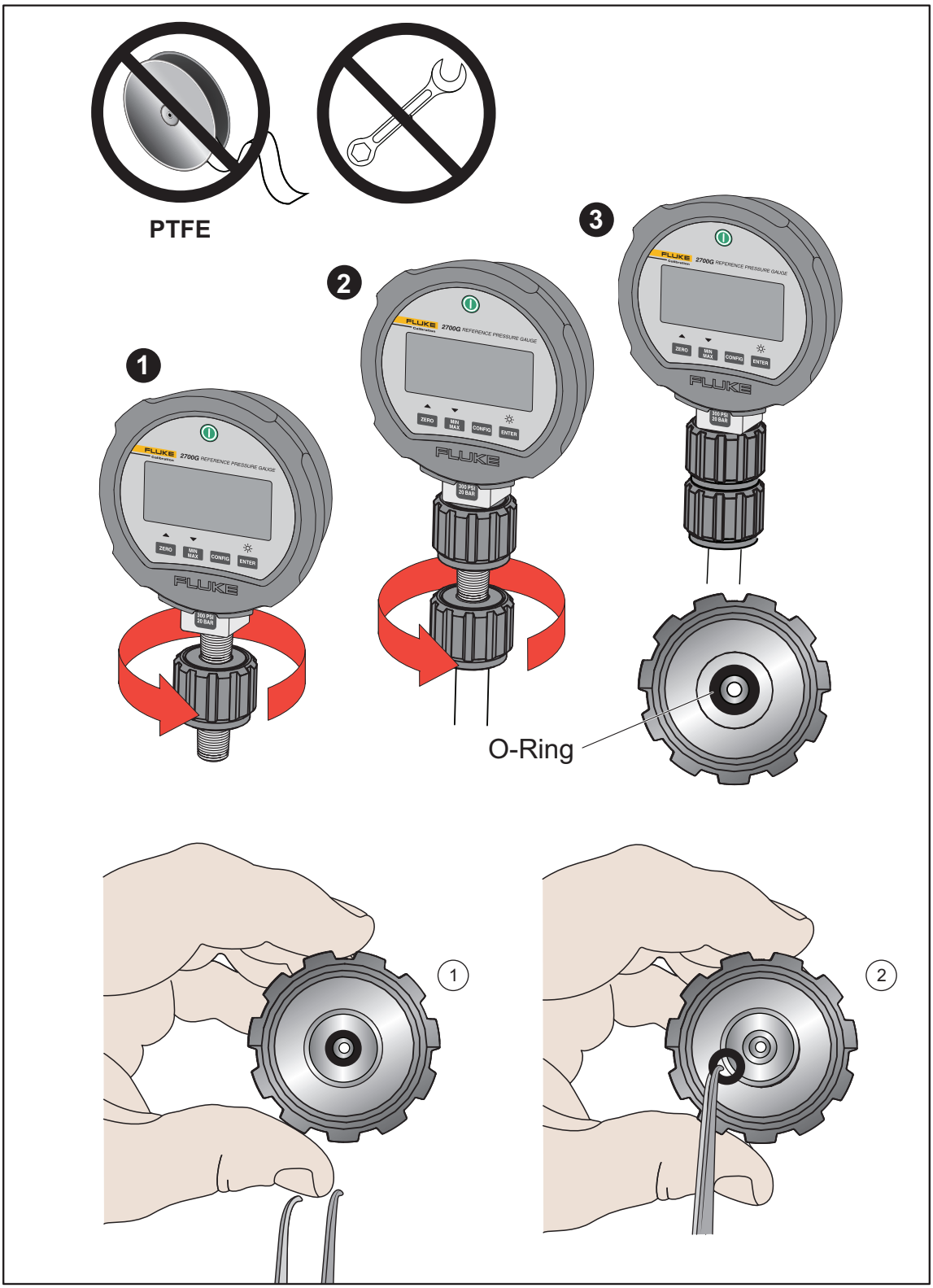

hwr017.eps

Figure 5. Replacing M20 O-ring

Connect a UUT

Connect the UUT to the top test port on the Product using the method described below:

⚠ Caution

To prevent Product damage or damage to a gauge:

- **DO NOT use PTFE tape on these connections. This prevents a correct seal. The Gauge Adapter sealing system can be hand-tight sealed up to 20 MPa (3000 psi). Wrenches or similar tools are not required. Over tightening can cause damage to threads or sealing faces.**
- **Before connection, ensure that there is an O-ring fitted to the test port.**
- **Check that the sealing face of the device to be fitted is clean and undamaged, as scratches or dents can form leak-paths.**

Note

The thread on the test port, and the lower part of the gauge adapters is LEFT-HANDED. The following procedure details the correct method for mounting devices using these adapters:

1. Screw the appropriate gauge adapter fully on to the UUT, see Figure 6.

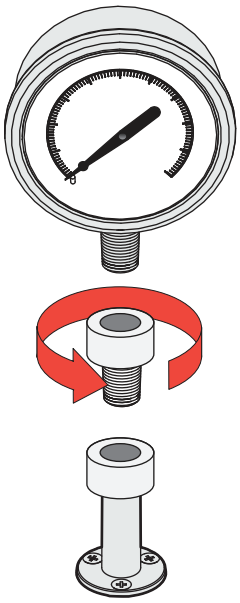

hwr029.eps

Figure 6. Screw on Gauge Adapter

2. Screw assembly down COUNTER-CLOCKWISE on to test port, see Figure 7.

Note

Hand-tight is sufficient. Ensure that the bottom face contacts the O-ring on the test port.

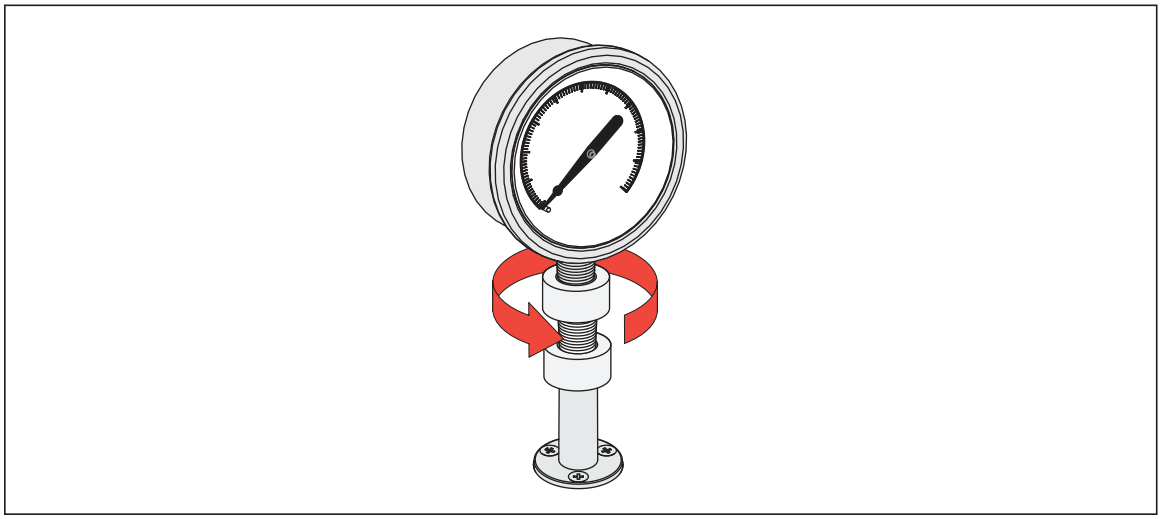

hwr030.eps

Figure 7. Connect Assembly to Test Port

3. To adjust the position to face forward, hold the gauge adapter and turn the instrument COUNTER-CLOCKWISE, so that it faces forward, see Figure 8.

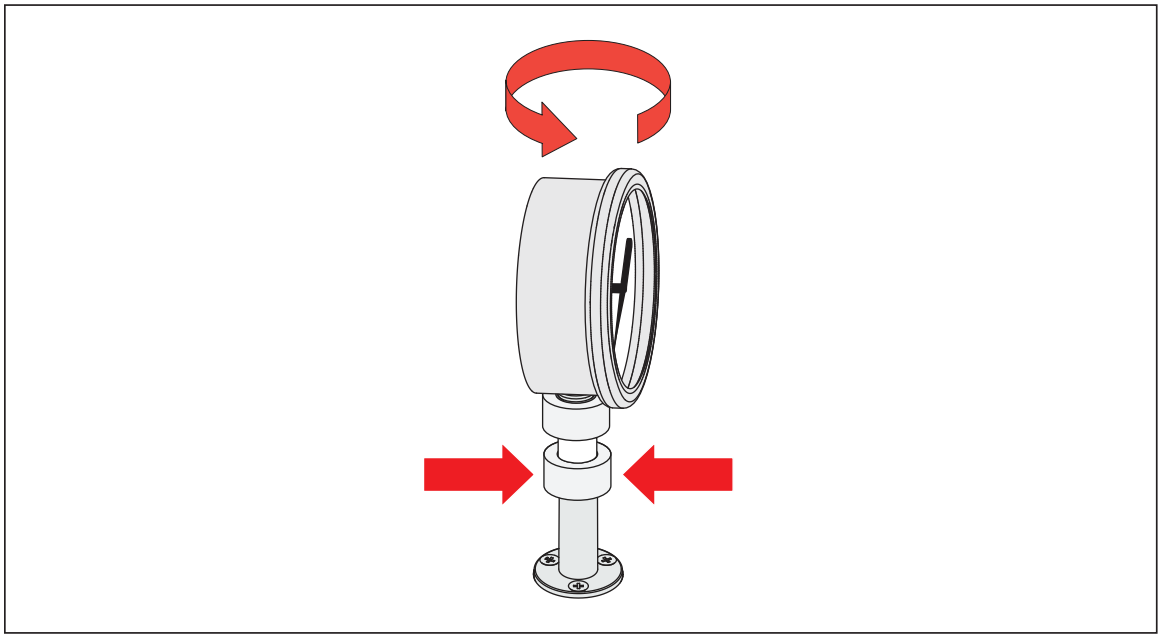

hwr031.eps

Figure 8. Adjust Gauge Position

4. Hold the instrument steady, while turning the gauge adapter COUNTER-CLOCKWISE until it pulls down onto the O-ring, see Figure 9.

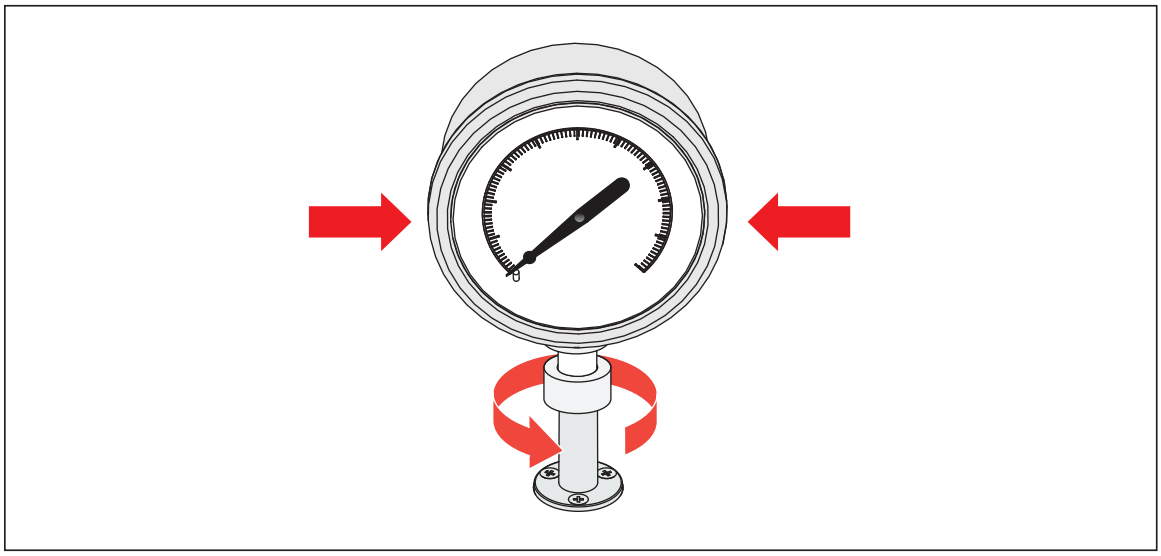

hwr032.eps

Figure 9. Tighten Gauge

Test Port Insert

For devices with 1/8 BSP or NPT mounting threads, the diameter of the thread is very close to the effective sealing diameter of the O-ring fitted to the test port. See Table 11 and Figure 10.

This can make it difficult to achieve a good seal. When mounting these devices, use the test port insert (stored in the spare seals container).

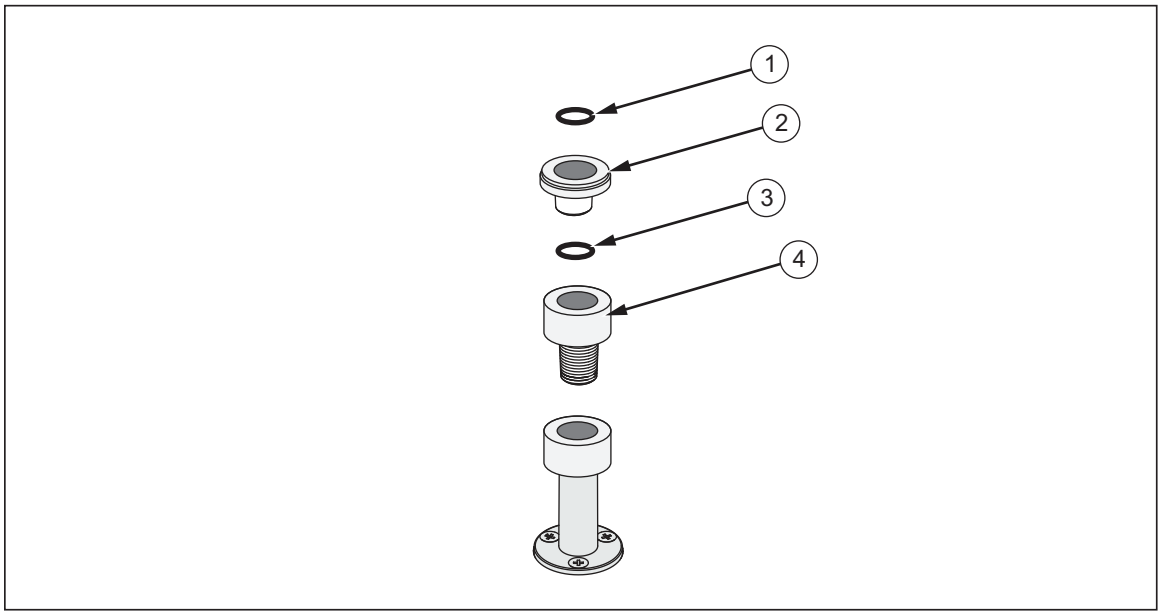

hwr033.eps

Figure 10. Test Port Insert

Table 11. Test Port Inserts - Parts List

Item	Description	Part
1	O-ring	3865163
2	Test Port Insert	3919892
3	O-ring	3865195
4	Test Port	4542465

To calibrate panel-mounted gauges with pressure connections in the rear, use an Angle Adapter such as the Fluke P5543.

REF Port

The REF port (Reference port) is located on the top rear left of the Product and should be open to atmosphere for gauge measurements or it can be connected to the reference port of the pressure instruments and UUTs.

Instruments with a low full-scale pressure range require special handling to assure their performance. These instruments are sensitive to atmospheric pressure changes, including disturbances in the atmospheric pressure. The reference side must be carefully controlled or changes due to wind, air handlers, doors shutting, and more will cause major variations. The Product tracks these changes but it may not track them in the same way as the pressure device under test. To control these changes, Fluke Calibration recommends that the reference port (also referred to as the "test-(test minus)" or "low" port) of all relevant devices be tied to the REF port of the Product.

The REF port can be sealed from atmosphere in most applications where the test times are relatively short. This isolates the port from pressure changes in the atmosphere and results in stable pressure measurement and control.

If the reference port of an instrument is completely sealed from atmosphere, then its pressure can change due to barometric pressure changes or temperature changes in the environment. If the pressure in the REF port becomes lower than the barometric pressure, then a vacuum pump must be attached to the EXHAUST port to allow the Product to control down close to 0 psig.

For Products that have a BRM installed, the barometer is tied to the REF port. In Gauge mode, connect the REF port as noted above. In Absolute mode, if the ambient pressure is not stable, seal the REF port from atmosphere to improve the control stability of the Product.

Pressure Control Settings

This section explains the pressure control settings of the Product. Some of these settings can be accessed on the main screen but all are located in the Control Settings in the Setup Menu. The Control Setup Menu is made up of the items in Table 12.

Table 12. Control Setup Menu

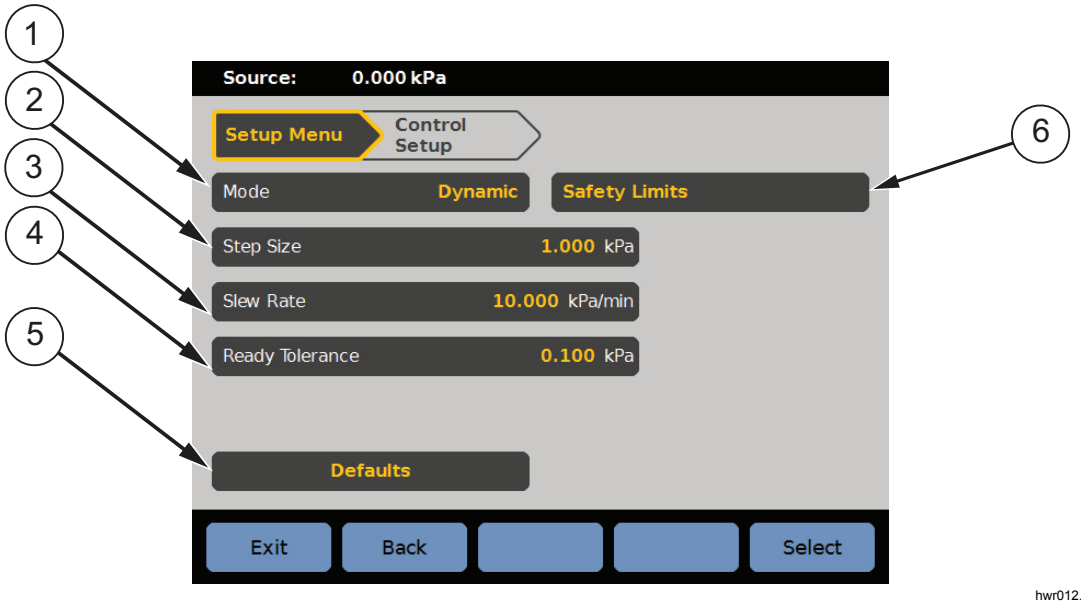

Item	Tab	Function
①	**Mode**	Choose between **Dynamic** or **Static** mode. See *Pressure Control Settings*.
②	**Step Size**	The size of the pressure step.
③	**Slew Rate**	A user-configurable control parameter that adjusts how fast the Product controls pressure to the setpoint.
④	**Ready Tolerance** (Shown only when Dynamic is selected.)	Related and used only with Dynamic Control mode, the Ready Tolerance is a configurable band to define the ready condition for the measurement. The band creates a positive and negative boundary around the Setpoint pressure. The measurement indicator shows “Not Ready” until the pressure is stable within the band.
	Control Limit (Shown only when Static is selected)	Related and used only with the Static Control mode, the control limit is used to set an upper and lower pressure limit around the Setpoint. The Product keeps the pressure within defined user limits. See the *Static Control Mode* and *Control Limits (Only for Static Control)* sections.
	Stability Limit (Shown only when Static is selected.)	Related and used only for the Static Control mode, the stability limit is a configurable tolerance to define the ready condition for the measurement. The measurement indicator shows “Not Ready” until the pressure is as stable as the value set in the stability limit. See the *Stability Limits (Only for Static Control) section* for more information.
⑤	**Defaults**	Returns the parameters of this menu to factory default settings.
⑥	**Safety Limits**	Protective user-configurable limits to protect the UUT from over-pressure. An upper, lower, and vent limit can be manually set. See the *Safety Limits* section.

Control Modes

The Product offers two different control modes to control pressure:

- **Dynamic** mode sets the target pressure and constantly adjusts to maintain the target.
- **Static** mode sets the target pressure and stops controlling, adjusting only when the measured pressure has exceeded specific limits.

The subsequent sections give more information on each mode.

Dynamic Control Mode

Dynamic Control sets the pressure to the target value and then controls pressure to keep it at the Setpoint value, see Figure 11. Dynamic Control is beneficial for most applications because it automatically compensates for changes to the system from adiabatic affects and small leaks. Dynamic Control is the default control mode when the Product is turned on.

Note

Dynamic Control generates a very small amount of pressure noise due to continuous pressure control. The pressure noise is undetectable in most UUTs. For high-end sensitive UUTs where pressure noise is a concern, use Static Control for the test.

In Figure 11, the default dynamic ready tolerance value is 0.1 % of the target pressure value.

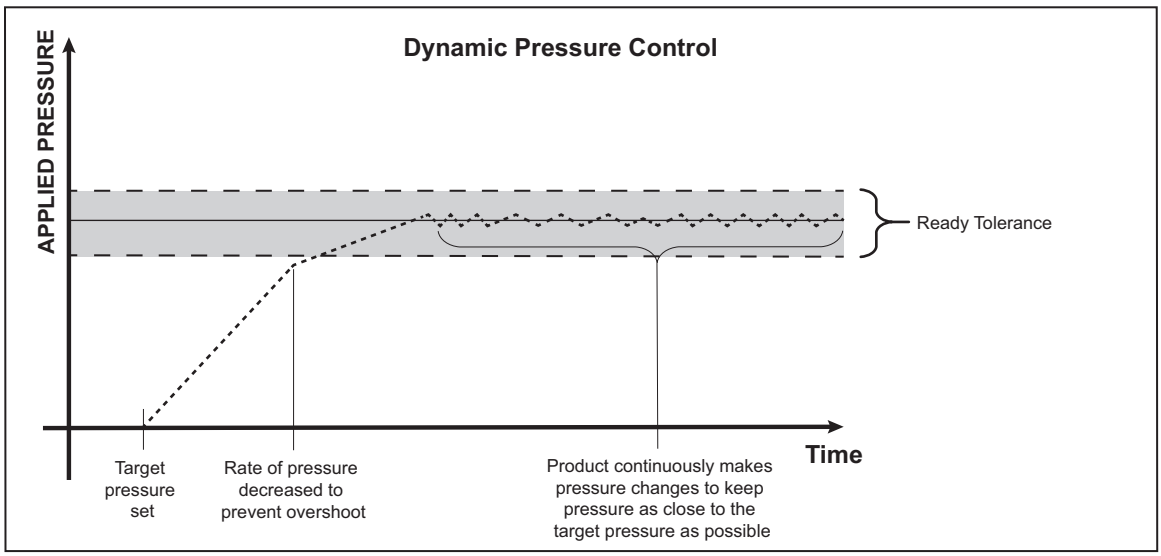

Figure 11. Dynamic Pressure Control Mode Example

The upper and lower dynamic ready tolerance for a target value of 2,000 psi is 2 psi (2,000 psi x 0.1 % = 2 psi).

The Product keeps the pressure stable between 1998 psi and 2002 psi.

Static Control Mode

Static Control sets the pressure slightly above the target pressure value and then turns off active pressure control, see Figure 12. The pressure is allowed to naturally settle until it exceeds the lower or upper ready tolerance. This pressure control sequence repeats until the target pressure is changed or the test is complete.

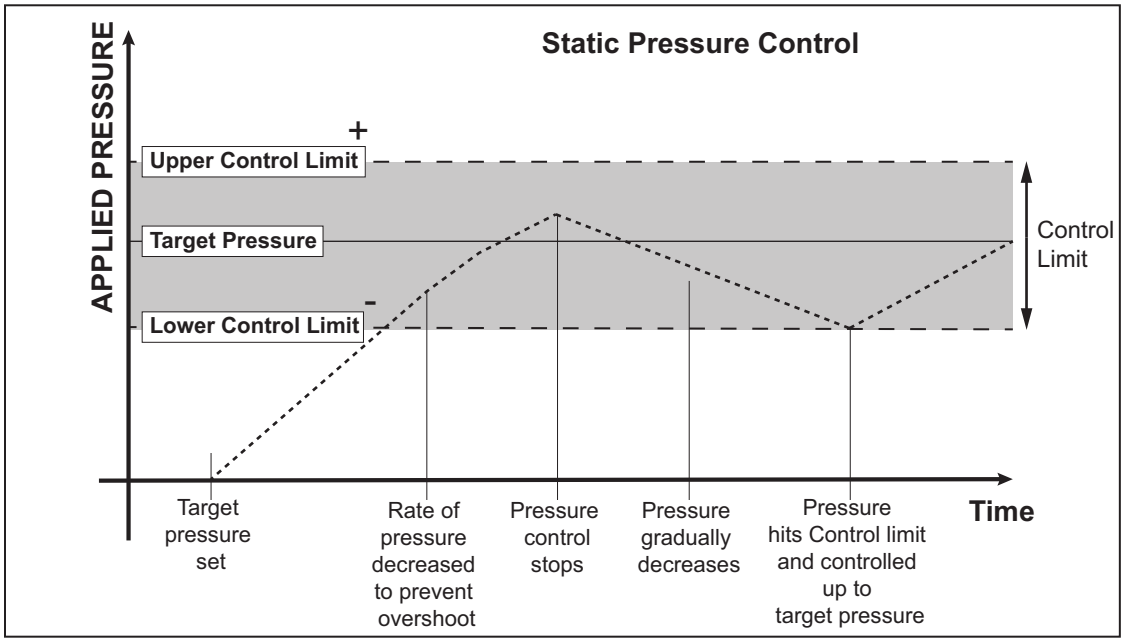

hwr041.eps

Figure 12. Static Pressure Control Mode Example

The advantage of Static Control mode is that pressure can be set and measured without noise from the pressure control system. Static Control shows in the user interface as Static. A **Ready** indication is predicated on pressure being inside the ready tolerance and the rate of change of pressure is less than the stability limit.

As an example, the upper and lower control limit for a target value of 2,000 psi is manually set to 5 psi. The Product keeps the pressure stable between 1995 psi and 2005 psi.

Control Limits (Only for Static Control)

Use Control limits to set an upper and lower pressure limit around the Setpoint. These limits are only used with the Static Control mode. The default value is 0.1 psi. The Product will not let the pressure go above or below the user-defined limits.

Stability Limit (Only for Static Control)

The Stability limit defines the stability at which the measurement indicator shows “Ready”. Use Stability Limit only with Static Control mode.

Slew Rate (Rate of Pressure Change)

Slew Rate is a user-defined maximum pressure rate of change. The Product controls this pressure with minimum overshoot into a wide variety of external volumes at its highest slew rate. In most applications Fluke Calibration recommends to set the slew rate at its maximum rate value. This provides the highest speed control without jeopardizing overshoot or control stability properties. In applications where the device under test could be damaged by high rate of pressure change, it can be necessary to slow down the slew rate (control speed). The Product control algorithm limits the rate of pressure change to the slew rate. On calibrators with full-scale pressures ranges <10 psi (70 kPa), it is common to reduce the slew rate to <25 % of full scale/min to improve on control overshoot characteristics.

Safety Limits

The Product has user-configurable safety limits that protect the UUT from being inadvertently over-pressured (SETUP **>Control Setup>Safety Limits**).

Upper Limit

The upper limit is a safety limit that protects the UUT from being inadvertently over-pressured. The upper limit is typically set just over the full-scale pressure of the UUT. If a Setpoint greater than the user-defined upper limit is entered, the Product does not accept the value and generates an error code. While in Control mode, if pressure exceeds the user-defined limit, the Product changes to Measure mode and shows an error message.

Lower Limit

This is the same as the high limit except it protects the UUT from low pressure limits.

Auto Vent

This is the defined maximum pressure that the Product can reach prior to venting the test port to atmosphere.

Measurement Setup

The Measurement Setup menu contains all options and parameters related to how the Product measures pressure. See the subsequent sections for more information on each setting within this menu.

Unit and Custom Units

The Product offers a large selection of standard engineering units that can be selected to satisfy a majority of calibration requirements. Table 13 lists the standard units that come with the Product. To select a unit, select SETUP **>Measure Setup>Unit** and select the unit.

Special calibrations can require an uncommon or special unit of measure. These nonstandard units are referred to on the Product as Custom Units. For custom units, select SETUP **>Measure Setup>Custom Units**. From this screen, enter the necessary parameters for a maximum of four custom units.

Table 13. Pressure Units

Abbreviation	Full Name	Conversion (Multiply to convert to kPa)
MPa	megapascal	1000
kPa	kilopascal	1
hPa	hectopascal	0.1
Pa	pascal	0.001
mmH_2OC	conventional millimeters of water	0.00980665
psi	pound-force per square inch	6.894757
inH_2O 4 °C	inch of water (4 °C)	0.249082008
inH_2O 20 °C	inch of water (20 °C)	0.248642103
inH_2O 60 °F	inch of water (60 °F)	0.24884
inH_2O 25 °C	inch of water (25 °C)	0.248502277
bar	bar	100
mbar	millibar	0.1
kgf/cm²	kilogram-force per square centimeter	98.0665
atm	standard atmosphere	101.325
cmH_2O 4 °C	centimeter of water (4 °C)	0.098063783
Torr	Torr	0.1333224
mTorr	millitorr	0.0001333224
mmHg 0 °C	millimeter of mercury (0 °C)	0.133322
cmHg 0 °C	centimeter of mercury (0 °C)	1.33322
inHg 0 °C	inch of mercury (0 °C)	3.38638
inHg 60 °F	inch of mercury (60 °F)	3.37685
knots	knots indicated airspeed	per NASA TN D-822
km/hr	kilometer per hour	per NASA TN D-822
feet	feet altitude	per MIL-STD-859A
meters	meters altitude	per MIL-STD-859A

Measurement Modes

Note

The measurement modes depend on the pressure modules that are installed.

The Measurement Modes on the Product are:

Absolute Mode – An absolute pressure measurement is made in relation to a perfect vacuum. A value of 0 represents a perfect vacuum. Certain ranges of PMMs are intrinsically absolute mode measurement modules, designated in their model number by having an 'A' at the beginning of the range designation section of the model number (for example, PM200-A200K). In addition, an inherently gauge mode module (represented by a 'G' at the beginning of the range designation section of the model number) can be used to measure absolute pressure if combined with a Barometric Reference Module.

Gauge Mode – A gauge pressure measurement is made in relation to atmospheric measurement. A value of 0 represents a pressure measurement taken at atmospheric pressure. Certain ranges of PMMs are inherently gauge mode measurement modules, designated in their model number by having a 'G' or 'BG' at the beginning of the range designation section (for example, PM200-G400K). A 'BG' designation means that the PMM is a bi-directional gauge and thus has the ability to measure both positive and negative gauge (also referred to as vacuum) pressures. In addition, certain intrinsically absolute modules have a built-in barometer, allowing the modules to measure absolute, gauge, and negative gauge pressures.

Tare Mode – When the user initiates Tare mode, the Product zeros out the current pressure reading. This allows an intrinsically absolute measurement module to be used to measure gauge mode measurements when not equipped with an internal barometer. Only use this method when atmospheric pressure is sufficiently stable.

Note

The Product shows vacuum pressures as negative values (for example, -465 mmHg). Some vacuum gauges do not show a negative sign (-) in front of the reading because they are used for only vacuum measurements (the vacuum gauge shows "465 mmHg psi vacuum" without the negative sign). To prevent misinterpretation of the vacuum gauge reading compared to the negative value on the Product, look at the gauge face or user documentation to see how the vacuum gauge shows vacuum pressures.

Measurement Resolution

Open the Measure Settings on the main menu to change the measurement resolution for the pressure and the electrical measurement. For pressure, the Measurement Resolution selections are 0.1%, 0.01%, 0.001%, or 0.0001% of the active PMM range (shown as **Range** on the display). For electrical, the selections are 0.1, 0.01, 0.001.

Module Selection

The Product selects the active pressure measurement module in these different ways:

Fixed – The Product always keeps the user-selected range active. The display shows the modules in slot 1 and 2. Choose either of these or use the other modes. The Product does not accept a setpoint outside the measuring range of the selected module.

Auto – This is the default setting. The Product selects the module with the lowest pressure range that is sufficient to measure the current pressure.

Fast – The Product selects the module with the lowest pressure range that is sufficient to measure the Setpoint. With this method, the Product does not switch ranges during an upward pressure application but instead switches immediately to the required range and stays on that range.

AutoZero

In normal use, the barometer module (if installed) reads atmospheric pressure through the REF port on the top of the Product. This limited use and the intrinsic measurement characteristics of the barometer module offer a stable reference pressure for measurement assurance features. A direct reading of atmospheric pressure also lets the Product determine gauge pressure with the intrinsically absolute pressure module and to measure absolute pressure with the gauge pressure modules. The AutoZero feature compares the active pressure module output to the internal atmospheric pressure reference, tares the difference, and in some modes, dynamically compensates for changes in atmospheric pressure. The function happens automatically during each vent operation after the Product has determined that a pressure measurement is fully vented and stable. Depending on what type of PMM is installed and which measurement mode is selected, AutoZero tares as follows:

- For PMMs that are intrinsically gauge being used for gauge measurements (for example, PM200-G400K in Gauge mode), AutoZero tares the reading to zero gauge pressure at vent.
- For PMMs that are intrinsically gauge being used to make simulated absolute pressure measurements (for example, PM200-G7M in ABS mode), AutoZero tares the reading to zero gauge pressure measurement at vent. For subsequent measurements, the Product dynamically compensates the output to show absolute pressure by adding the outputs of the active gauge pressure module and the barometer module.
- For PMMs that are intrinsically absolute being used for gauge measurements (for example, PM200-A200K in Gauge mode), AutoZero tares the reading to zero gauge pressure at vent.
- For PMMs that are intrinsically absolute and used for absolute measurements (for example, PM200-A200K), Auto Zero tares the module's reading so that it equals the reading from the most accurate absolute module installed. PM200-AXXX modules do not have internal barometers.

Note

An AutoZero is performed prior to running HART tasks when in gauge mode.

Atmosphere

Select the barometric reference or manually enter a barometric value from an outside source from the Atmosphere menu (SETUP **>Measure Setup>Atmosphere**). If a barometer module is installed, the Product automatically selects it as the default barometric reference. To change the barometric reference, select the module and unit from the Atmosphere menu.

Head Height

For calibration of a UUT at a different height than the Product, the user must make a head-height correction. The head-height correction is the vertical difference between the reference plane of the UUT to the center of the PMMs knob while installed in the Product in inches, millimeters, or centimeters. See Figure 13.

After the user makes the measurement, the user enters that value into the Product. Select **ABOVE** if the UUT is above the Product and select **BELOW** if the UUT is below the Product.

Note

Failure to make a head-height correction can result in an inaccurate pressure measurement.

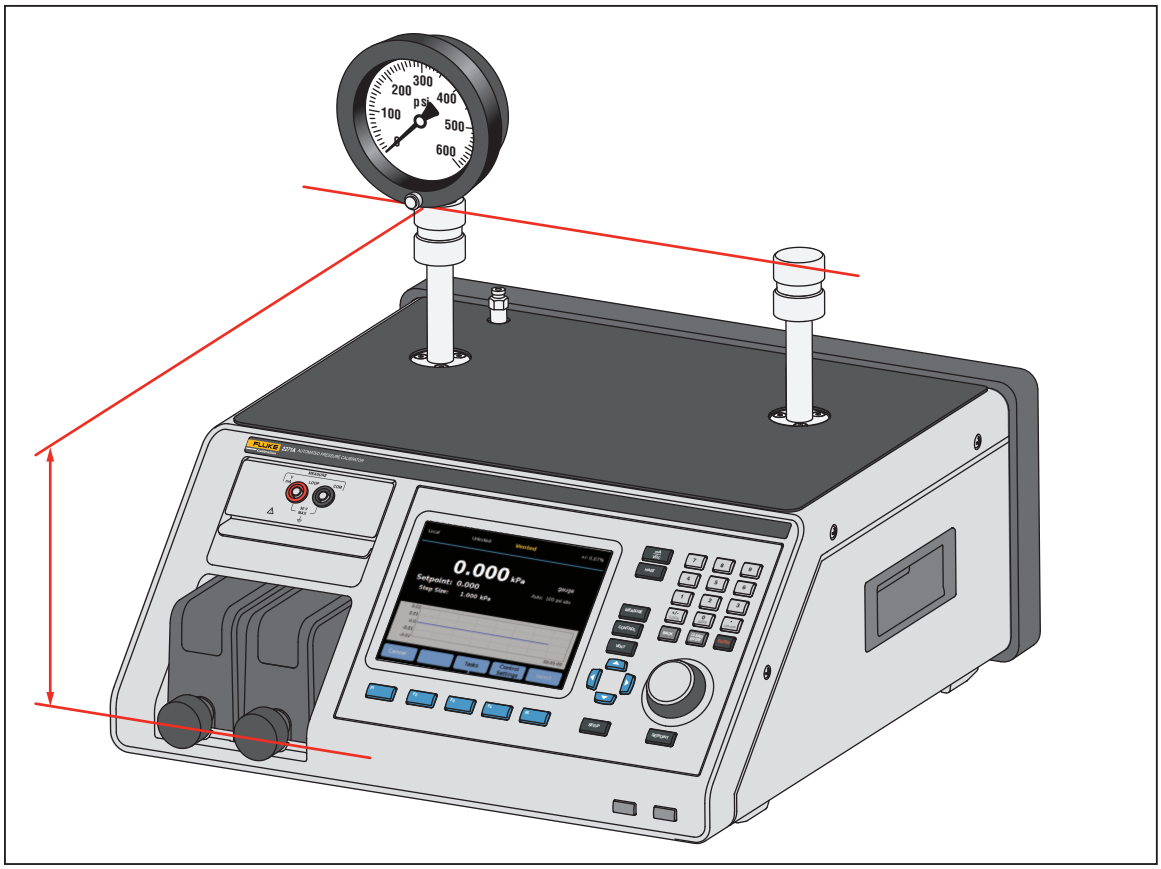

hwr004.eps

Figure 13. Head-Height Correction Measurement

Pressure Filter

The pressure filter allows user adjustment from 1 to 99 values in a rolling average. Typically the value has been set to 15 as default.

PM500 Absolute Zeroing

This section explains how to zero the native absolute mode of PM500 pressure modules while in the Product, see Table 14.

Table 14. Absolute PM500 Pressure Modules

Model	Range	Nominal Zeroing Pressure
PM500-A120K	0.08 kPa to 120 kPa	0.080 kPa
PM500-A160K	0.08 kPa to 160 kPa	0.080 kPa
PM500-A200K	0.08 kPa to 200 kPa	0.080 kPa
PM500-A350K	0.08 kPa to 350 kPa	0.080 kPa
PM500-A700K	0.08 kPa to 700 kPa	0.080 kPa
PM500-A1.4M	35 kPa to 1,400 kPa	ATM[1]
PM500-A2M	70 kPa to 2,000 kPa	ATM[1]
1. Atmospheric (ATM) Pressure is in the range of 70 kPa to 103 kPa.		

Required Equipment

Table 15 lists the minimum required equipment to zero a PM500.

Table 15. PM500 Zeroing Minimum Required Equipment

Equipment	Note
2271A	Pressure calibrator for PM500 Pressure Modules
Vacuum Sensor	For ranges A700kPA and below. See Table 16 for maximum allowable measurement uncertainty.
Absolute Pressure Reference	For 1.4 MPa and 2 MPa ranges. See Table 16 for maximum allowable measurement uncertainty.
Vacuum Pump	For PM500s that are zeroed sub-atmospheric (700 kPa Absolute). Must be able to evacuate to a pressure <80 Pa.
Metering (Bleed) Valve	
Tubing	As needed. KF-16 (0.75 inch) PVC tubing or equivalent.
Fittings/Valves	As needed.

Table 16 lists the maximum reference measurement uncertainty required for zeroing to maintain published specifications.

Table 16. Maximum Reference Measurement Uncertainty

Model	Maximum Measurement Uncertainty [±]
PM500-A120K	0.0035 kPa (26 mTorr)
PM500-A160K	0.0045 kPa (34 mTorr)
PM500-A200K	0.0025 kPa (19 mTorr)
PM500-A350K	0.0100 kPa (75 mTorr)
PM500-A700K	0.0245 kPa (184 mTorr)
PM500-A1.4M	0.050 kPa (0.0073 psi)
PM500-A2M	0.070 kPa (0.0102 psi)

PM500 Full Scale ≤700 kPa Absolute Zeroing

To zero the PM500:

1. Turn on the Product.
2. Open the Module Bay and install the PMM into any available slot.
3. From the display, push SETUP and then **Module Information** on the Setup Menu.
4. On the Module Information screen, select the appropriate slot number of the pressure module that you will zero. The selected Slot menu opens.
5. Select **Zero Module** from the Slot menu
6. Connect the vacuum sensor, vacuum source, bleed valve, and applicable hardware and tubing to the Test Port of the Product. Figure 14 shows an example setup. Connect the bleed valve as close to the vacuum pump as possible and the reference vacuum sensor as close as possible to the test port. Plug the second test port.

   An optional 3-way ball valve can be installed at the test port (Figure 14). This setup keeps the vacuum sensor in its original position with the ability to isolate the vacuum sensor when the vacuum sensor is not used to zero PMMs. When the vacuum sensor is isolated, the test port can be used for other processes.

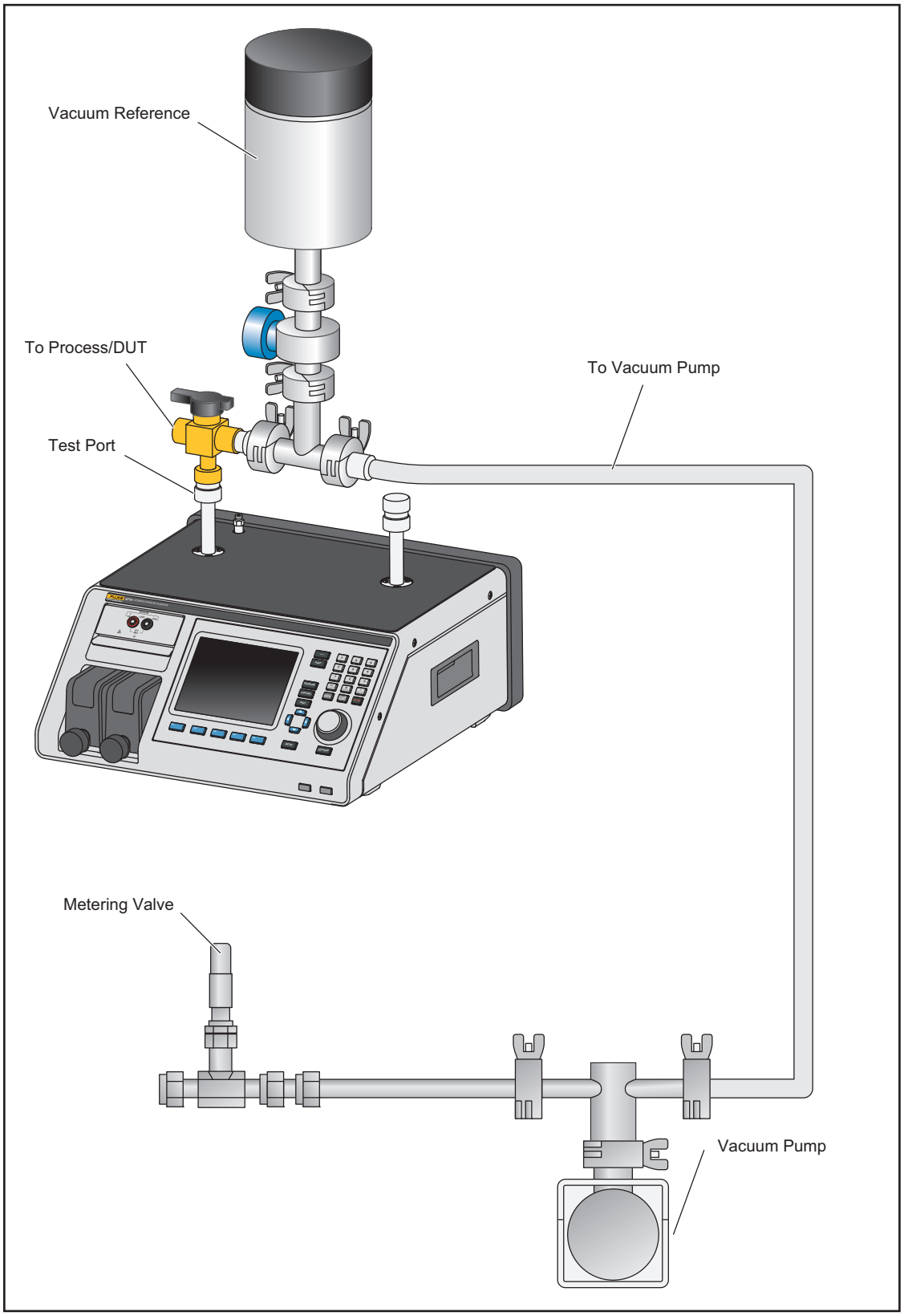

hwr043.eps

Figure 14. Zero by Vacuum Setup

7. Apply a vacuum of 0.08 kPa absolute (±0.01 kPa) and allow the pressure to stabilize.
8. Enter the pressure indication from the reference in the **Vacuum Reading** field and select the **Zero** button from the Zero menu. The PMM pressure indication (Source) reflects the zero-corrected pressure when the zeroing process is complete.
9. Push F2 (**Back**) to view the zOffset value in the Calibration Coefficients section of the screen.

PM500 Full Scale >700 kPa Absolute Zeroing

Zero correction in absolute mode is automatic when a module is selected as the AutoZero reference and the system is vented.

Ensure a sufficiently-accurate module is available if you use automatic zeroing. Table 16 lists the maximum allowable uncertainty required to zero the PMM.

If a module is not selected as an AutoZero reference, use manual zeroing mode to zero the PMM.

General Tasks

Tasks are pre-programmed routine functions that quickly perform common tests and tasks. The tasks are shown in Table 17. Tasks are classified as General and Calibration.

Note

CPS tasks are greyed out and disabled if the CPS is not turned on in the settings. See Contamination Prevention System (CPS). The subsequent sections provide more information on each task.

Table 17. General and Calibration Tasks

Indicator/Name	Function
General Tasks	
Leak Test	Opens a menu to configure and do a leak test on the system. See the *Leak Test* section.
Exercise	Opens a menu to configure and exercise a UUT. See the *Exercise* section.
Zero PMM	Manually sets the PMM's zero pressure value same with local atmosphere pressure value.
CPS Cleanout (Disabled when CPS is OFF in the Setup Menu)	Predefined sequence that cleans out the CPS with pressure. Useful after testing a very dirty UUT where cross contamination could be a factor.
CPS Purge (Disabled when CPS is OFF in the Setup Menu)	Opens a menu to configure and purge the plumbing in the Product. See the *CPS Purge* section.
Calibration Tasks	
Transmitter	Opens an Automated test interface to make, edit, modify, save, and run a user-configured automated test. See the *Transmitter* section.
Pressure Device	Opens an Automated test interface to make, edit, modify, save, and run a user-configured automated test. The result of the test is based on the pressure output instead of mA. See the *Pressure Device* section.
Pressure Switch	Starts a preprogrammed task to test a pressure switch dead band. See the *Pressure Switch* section.

Leak Test

This function performs an automated leak test to show the rate of pressure loss. To determine the rate of pressure loss, the Product uses the test parameters to set the pressure to a Setpoint value. Once stable, the Product turns off pressure control to measure the pressure loss. To help determine if a leak is external to the system or inside of the system, the leak test mode can be changed to internal or external.

To run a leak test, set these parameters to tell the Product how to perform the leak task:

Setpoint Pressure – The target pressure of the test.

Stability – Tells the length of time that the pressure is dynamically stabilized at the Setpoint before the test starts. The test does not start until the Product shows the ready indication for the amount of time prescribed.

Duration – After reaching the stability time, the test starts and the Product changes to Measure mode. The system then measures the rate of pressure loss. When the test ends, the average rate of pressure loss per minute is shown. Time duration can be set here.

Pressure Switch

To test a pressure switch:

1. Go into the Setup menu.
2. Connect the UUT to the switch test terminals on the front of the Product (EM300 input terminals) with the pressure switch terminals to the pressure switch contacts (de-energized dry contacts). The polarity of the terminals does not matter. Connect the test port of the Product to the input of the pressure switch.
3. Select **Tasks>Switch Test**. Use the keypad to enter the switch test values into the **Switch Test** menu.
4. Configure the test:

   Start – Minimum Setpoint pressure

   End – Maximum Setpoint pressure for the test

   Rate – This is the slew rate to determine how quickly the pressure will increase or decrease. For sensitive switches, Fluke Calibration recommends a slower rate.

   Direction – Select whether to increase then decrease pressure (up and down), or a one-time upward test (single).
5. Select **Run** to start the test. The task bar shows the progress of the test and also the state of the switch (Open or Closed). The test is fully automated and progress can be viewed at any time.

   The Product changes the pressure over the specified range at the required rate. When the switch changes state, the Product records the pressure. The results of the switch test are shown on the display when the test completes.

Exercise

The Exercise function repeatedly pressurizes a UUT to reduce the effects of hysteresis. The Exercise menu specifies a maximum and minimum Setpoint pressure and how many times to repeat the routine (cycles).

To Exercise, set these parameters so the Product can do the task:

Maximum – Max Setpoint

Minimum – Minimum Setpoint

Cycle – How many times to repeat the tests

Delay – How long to stay at setpoint when the setpoints are reached

Control at Target – If ON, the Product uses the dynamic control mode to keep pressure at the Setpoint. If OFF, the Product uses the static pressure control at the Setpoint.

Zero PMM

Use this function to manually set the PMM zero-pressure value to be the same as the local atmosphere pressure value.

Note

Zeroing is done automatically for HART tasks when in gauge mode.

CPS Cleanout (If CPS is installed)

Use the **CPS Cleanout** menu to choose the duration of the CPS cleaning process. The CPS cleanout process pushes contaminates from the sump of the CPS to the waste bottle. A low-pressure setpoint is automatically set to establish a flow to clean out the CPS for the specified amount of time. Note that this same function occurs each time the CPS controls downward (or vents) and the pressure is <170 kPa (25 psi).

To run a cleanout process:

1. Select and enter the CPS cleanout menu.
2. Set the cleanout time in seconds.
3. Push [F4] to run the process, push [F4] to repeat the cleanout cycle if needed.
4. Push [F5] to stop.

CPS Purge

Purge pressurizes and vents the test system plumbing connected to the Product. Fluke Calibration recommends that if liquid or particulate contaminates are expected to be present, the user should do a system purge before a calibration is performed. The Product maintains internal cleanliness during any operation, but contaminates are most easily handled during a relatively low pressure purge. To purge the system, the Product pressurizes to the user-defined purge pressure and then immediately vents to the plastic waste container. The Product repeats the process for the number of cycles that are set.

To run a purge process:

1. Select CPS purge and push F5 to enter the menu.
2. Set the Pressure (100 kPa for example).
3. Push F4 to save.
4. Set how many times to cycle (or repeat).
5. Push F4 to save.
6. Push F4 to run the purge process.

Calibration Tasks

Transmitter

The first step in transmitter calibration is to do an As Found calibration. As Found calibrations are done by configuring and running a mA “Program”. A Program is used to define the test parameters including test points, tolerances, and mode (absolute/gauge). With the mA program, a “Closed Loop” function can be used to fully automate the test.

Before running a mA program to perform an As Found or As Left test:

1. Prior to the test, do a leak test on the transmitter to make sure there are no significant leaks. See the *Leak Test* section.
2. Connect the transmitter to one of the pressure ports and connect the test leads from the EMM to the appropriate terminals on the pressure transmitter. Observe polarity. See Figures 7 and 8. Make sure to plug the test port that is not in use.
3. Push mA VDC on the front panel.
4. From the main menu, push F3 Tasks and select **Transmitter**.

The Transmitter menu is explained below in the next sections.

UUT

UUT is used to configure the transmitter under test. Push F5 to select and enter edit mode. The parameters that can be entered are listed below:

UUT Range (0%):		Configure the UUT lower range
UUT Range (100%):		Configure the UUT upper range
Tolerance Method:	**% Reading**	Use reading percent as tolerance method
	% Span	Use span percent as tolerance method
	Unit	Use Unit (nominal mA) as tolerance method
Allowable Error:		Configure the acceptable error, associate with Tolerance Method
Closed Loop:		ON / OFF

Configure to fully automate the test or do the test manually. For a fully-automated test where the program reads the UUT mA measurement and then continues, set Closed Loop to ON. For manual operation, set Closed Loop to OFF.

Note

The mA measurement cannot be entered by the user because the measurement is read from the EMM. This is to prevent measurement errors.

New

New is used create a new transmitter mA program.

Push F5 to select and name a new program.

Start:	The start pressure in the test sequence.
End:	The end pressure in the test sequence.
Points Up:	Determines the numbers of upscale.
Points Down:	Determines the numbers of downscale.

Dwell Time:

Once the pressure is within the specified tolerance, the Product starts a timer that runs for a user-defined number of seconds (dwell time). As long as this timer is running, the Product remains at the designated setpoint unless the max time (see below) elapses. When the dwell time expires, the Product goes to the next step. Typically the dwell time should be set to a value less than the max time.

Max Time:

The maximum time (in seconds), including the dwell time, that the Product can spend on one step of the program. After the max time elapses, the Product automatically goes to the next function step in the program, even if the current setpoint has not been reached. The max time selection limits the amount of time that the Product can spend on any one setpoint. Typically the max time should be set to a value greater than the dwell time. If the max time is set to zero, the Product attempts to reach the setpoint indefinitely (for example, if the max time function is disabled).

Auto Fill:

Creates a test sequence of uniform steps according to Points Up and Points Down values. The steps size is [End – Start] / Points Up number combined with [End – Start] / Points Down number.

Note

You can also change the Auto Fill set points in Edit menu.

Delete

Select **Delete** to remove the selected program name. Push F5 to select and delete.

Rename

Select **Rename** to change the name of a selected program. Push F5 to select and Rename.

Push F3 to save the new program name.

Edit

In the Edit menu, use the arrow softkeys to select a test point from the left list. Push F5 to select and view the test point.

Edit the setup values when they need to be changed. The setup values are:

Setpoint: Change value when necessary

Set to ATM / Enter Value:

Set point to atmosphere or enter value manually.

When in gauge mode, make sure to set the first setpoint to use ATM and not 0. When set to 0 the controller tries to control pressure to 0.00 psi for example.

Dwell Time: See the explanation in *New*.

Max Time: See the explanation in *New*.

Move Up: Move the selected point upward.

Move Down: Move the selected point downward.

Insert: Insert a new test point above the selected point.

Delete: Remove the selected point from the test sequence.

Auto Fill: Enter auto fill function in menu.

Note

Modify the values in Auto Fill menu and applied Auto Fill would change all setting values in test sequence.

Measure Setup

This menu has options and parameters for pressure measurement. See the *Measurement Setup* section for detailed information on each menu item.

Each separated program name keeps a unique configuration of the Measure Setup.

Control Setup

This menu has options and parameters for pressure control. See the *Control Setup* section for detailed information on each menu item.

Each separate program name keeps a unique configuration of the Control Setup.

Run a Transmitter mA Program

To run a transmitter mA program:

1. When mA program configuration is ready, push F4 to start the test. As the test runs, the Product controls the pressure to the setpoint. Once at the setpoint and the pressure stabilizes (**Ready** is shown), the dwell countdown timer starts. Once the dwell is finished, if closed loop was ON, then the measurement is taken and the Product continues to the next setpoint. If closed loop is OFF, push **continue** to go to the next setpoint.
2. After the Run step finishes, a simple test result is shown on display. Push page up or page down if it has multiple pages.
3. A test report file XXXX(DATE)_XXXX(TIME).csv is stored in the internal mass storage disk. Use a USB cable connected to the chassis to copy the data report.

Pressure Device

Before a pressure program is run to do an As Found or As Left test:

1. Prior to the test, do a leak test on the transmitter to make sure there are no significant leaks. See the *Leak Test* section.
2. Connect the pressure device to one of the pressure ports. Make sure to plug the other test port that is not in use.
3. Push F3 on the front panel and select **Pressure Device**.

The pressure program menu is explained below:

UUT

To configure the pressure device under test, push F5 and enter edit mode. The following parameters are available.

Use UUT Tolerance:	**Yes/No** Select yes or no to use the UUT tolerance or not.
Threshold Tolerance:	Setting threshold tolerance value
Relative Tolerance:	Setting relative tolerance value
Combination Method:	**Great of /Addition** Combine the Threshold Tolerance and Relative Tolerance. At each pressure you would calculate the threshold and the relative and use whichever is greater or as addition.

New

Use New to make a new pressure device program.

Push F5 to select and name a new program. Put the correct value fill in the column:

Start:	The start pressure in the test sequence
End:	The end pressure in the test sequence
Points Up:	Determine the numbers of upscale.
Points Down:	Determine the numbers of downscale.

Dwell Time:

See “Dwell Time” under the *Transmitter* section.

Max Time:

See “Max Time” under the *Transmitter* section.

Auto Fill:

See “Auto Fill” under the *Transmitter* section.

Delete

Select **Delete** to remove the selected program name. Push F5 to select and delete.

Rename

Select **Rename** to change the name of a selected program. Push F5 to select and Rename.

Push F3 to save the new program name.

Edit

In the Edit menu, use the arrow softkeys to select test point from the left list. Push F5 to select and view the test point.

Edit the setup values when they need to be changed. The setup values are:

Setpoint: Change value when necessary

Set to ATM / Enter Value:

Set point to atmosphere or enter value manually.

Dwell Time: See the explanation in *New*.

Max Time: See the explanation in *New*.

Move Up: Move the selected point upward.

Move Down: Move the selected point downward.

Insert: Insert a new test point above the selected point.

Delete: Remove the selected point from the test sequence.

Auto Fill: Enter auto fill function in menu.

Note

Modify the values in Auto Fill menu and applied Auto Fill would change all setting values in test sequence.

Measure Setup

This menu has options and parameters for pressure measurement. See the *Measurement Setup* section for detailed information on each menu item.

Each separated program name keeps a unique configuration of the Measure Setup.

Control Setup

This menu has options and parameters for pressure control. See the *Control Setup* section for detailed information on each menu item.

Each separate program name keeps a unique configuration of the Control Setup.

Run a Pressure Device Program

1. When a pressure program configuration is ready, push F4 to start the test. As the test runs, the Product controls the pressure to the setpoint. Once at the setpoint and the pressure stabilizes (**Ready** is shown), the dwell countdown timer will start.
2. Once the dwell is finished, use the Jog Knob as fine adjustment to make sure the value on the pressure device reaches the displayed UUT reading.
3. Push F3 when the reading becomes stable and reaches the setpoint.
4. After the Run step finishes, test results show on the display. Push page up or page down if it has multiple pages.

A test report file named “XXXX (DATE) _XXXX(TIME).csv” is stored in the internal mass storage disk. Use a USB cable connected to the chassis to copy the data report.

HART Operation

The HART function of the product allows for calibration and testing of many HART-enabled devices such as transmitters. The EMM uses Universal Practice Commands and many Common Practice Commands that allow the user to change parameters and easily make adjustments to the HART device. Some HART devices require the use of specific device drivers in order to make changes to parameters which the EMM is not equipped with. In this case, use of a field communicator such as the Fluke 754 Documenting Process Calibrator is necessary.

Pressure Transmitter Instructions

The Product tests, troubleshoots, and calibrates analog as well as “smart” pressure transmitters with HART functionality. Pressure transmitters are usually classified as an “analog” transmitter or a “smart” transmitter.

Analog Transmitters

Analog transmitters are fairly basic and let the user make two adjustments to calibrate:

1. Zero the transmitter by adjusting the LRV (Lower Range Value) of the transmitter to the zero pressure point that will supply an output of 4 mA.
2. Adjust the URV (Upper Range Value) of the transmitter to the upper working pressure that will supply an output of 20 mA.

These transmitters are usually adjusted with a screwdriver by turning two potentiometers on the top or side of the transmitter. The Product helps in the calibration of these analog transmitters by providing an accurate, easy to control source of pressure while also precisely measuring the analog 4-20 mA signal.

Smart Transmitters

Smart transmitters are more complex and offer more features that allow the transmitters to store and transmit more information to a central control center. For example, many smart transmitters have a digital signal that transmits not only the analog 4-20 mA signal, but also the pressure reading back to the central control center. While many newer systems use this digital signal, most still just use the analog 4-20 mA signal which just requires the analog circuit to be adjusted when calibrated.

To communicate with smart transmitters, Highway Addressable Remote Transducer (HART) communication protocol is used. HART is an industry standard that defines the communications protocol between smart field devices and a control system that uses traditional 4-20 mA wiring. HART allows the technician to configure and adjust variables stored and used by the transmitter. Many of these variables are used to calibrate the smart transmitter. The Electrical Measurement Module (EMM) is HART-enabled and uses Universal Practice Commands and many HART Common Practice Commands that let the user change parameters and make adjustments to the HART device. Many smart transmitters are designed with specific commands that are not part of the common practice or universal command library. These commands are sometimes needed to perform a digital sensor trim (for example) and are referred to as “device drivers”. The EMM does not contain any device drivers.

Using the mA Function to Test and Troubleshoot

To test the mA output of a pressure transmitter prior to calibration, whether analog or smart, the Product has a mA menu (mA VDC) that supplies 24 V loop power while accurately controlling pressure to the transmitter. The menu can enable or disable 24 V loop power to the transmitter and also can measure dc voltage up to 30 V.

To test or troubleshoot a pressure transmitter:

1. Connect the transmitter to one of the pressure ports and connect the test leads from the EMM to the appropriate terminals on the pressure transmitter. Observe polarity. See Figures 15 and 16. Make sure to plug the other test port that is not in use.
2. Push mA VDC on the front panel.
3. Push F5 to turn on 24 V Loop Power ON.
4. Use the pressure controls on the front panel to manually control pressure to complete the test or troubleshooting. See the *Pressure Control* section for information on how to control pressure.

⚠Warning

To prevent personal injury or damage to the UUT, know the pressure limitations of the pressure device being tested. The Product is can control pressure up to 20 MPa (3,000 psi) and can set pressure when controlling to a setpoint.

5. When finished, push vent to make sure the system is vented and disconnect the pressure connections and electrical leads.

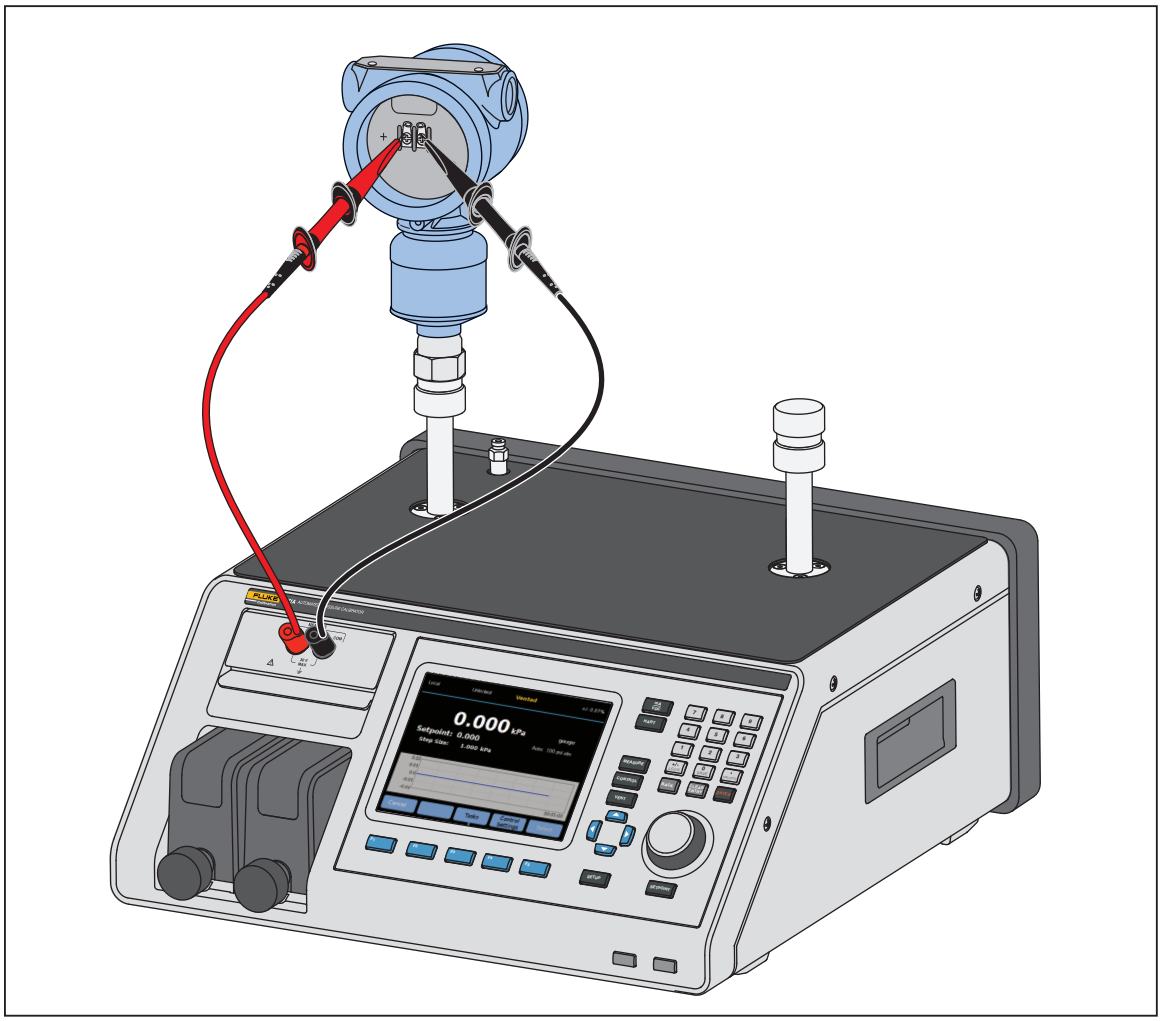

hwr021.eps

Figure 15. Typical HART Static Pressure Transmitter Connection Through the EMM Module

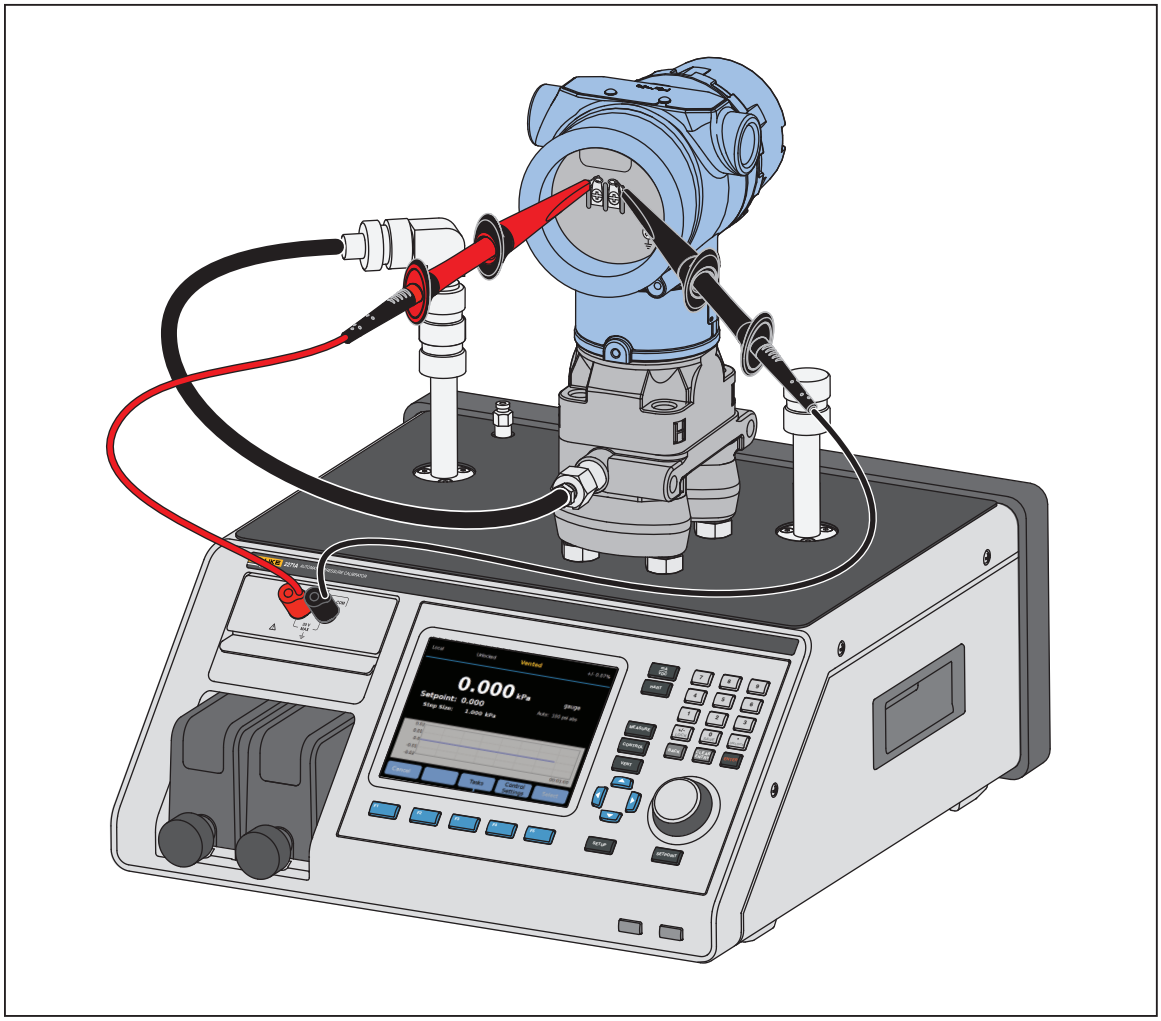

hwr019.eps

Figure 16. Typical HART Differential Transmitter Connection Through the EMM Module and the Test Port

Connect to a HART Transmitter

1. Connect the test leads from the EMM to the appropriate terminals on the HART device. Observe polarity. See Figures 15 and 16.
2. Push HART. The HART connection menu shows with these settings:
   - **250 Ohm Resistor** – When ON, EMM uses the built-in 250 Ω resistor required for HART communication.
   - **Use Hart Unit** – When YES, the pressure unit of the controller changes to match the unit of the pressure transmitter.
   - **Write Protect** – When ON, the transmitter is protected from data changes.
3. Push F5. The Product scans (polls) for connected devices from addresses 0 to 65. When a transmitter is found, data is obtained. If the Product does not detect a device, check the connections and wire polarity and then push **Connect** again. If a connection cannot be made after multiple attempts, troubleshoot the transmitter with the mA mode. See the *Using the mA Function to Test and Troubleshoot* section.

HART Tasks

The HART tasks are explained in the following sections. See Figure 17 for an overview of the menus.

Trim PV Zero

Use to zero the pressure sensor in a transmitter. The resulting offset must be within limits by each device. The span of Primary Variable remains constant. This command does not affect or interact with the Upper or Lower-Range Values.

1. Select F4 (HART Tasks) on the HART Menu.
2. Select **Trim PV Zero**.
3. Push F3 to zero PV.

Trim Current Output

The Trim Current Output commands can adjust the transmitter's DAC (digital to analog converter) at the 4 mA and 20 mA points.

To Trim Current Output:

1. Select F4 (HART Tasks) on the HART Menu.
2. Select **Trim Current Output** from the menu:
3. Use **Averaging Measurement** and **Averaging Time** to average the measurement value applied to the trim.
4. Push F4 (Start) trim
5. Push F3 to start trimming the 4 mA point. The **Send** button is enabled when measuring value is stable.
6. Push F4 to send the 4 mA trimming value to UUT.
7. After 4 mA trimming is complete, push F3 to repeat the 4 mA trimming if necessary. Or push F5 to change to trim 20 mA.
8. Push F3 to start trimming the 20 mA point. The **Send** button is enabled when measuring value is stable.
9. Press F4 to send 20 mA trimming value to UUT.
10. After 20 mA trimming is complete, push F3 to repeat the 20 mA trimming if necessary. Or push F1 to exit.

Trim by Re-ranging

You can adjust the transmitter by re-ranging the upper and lower range values. This type of trim is typical for analog transmitters and smart transmitters used in analog processes. This trim function alters the transmitter's interpretation of the input signal.

To trim by re-ranging:

1. Push F4 (HART Tasks) on the HART Menu.
2. Select **Trim by Re-ranging**.
3. In the Trim by Re-ranging menu:

   Range: **Upper / Lower / Both** - use to select a point or both to trim.

   4mA: Only trim 4 mA

   20mA: Only trim 20 mA

   Both: Trim both 4 mA and 20 mA

   LRV: Configure the lower range value of transmitter

Note

*Changing the LRV affects the URV. If the LRV should be tested against ATM, set "*Use ATM*" checkbox to "*YES*". When it sets to "*YES*", the* LRV *is non-editable.*

URV: Configure the upper range value of transmitter

Closed Loop:

ON: Automatically sets the pressures to the LRV and URV values and dwells for the time specified in the **Dwell Time** field. The measurements are taken from the amount of time shown in the Averaging Time field.

OFF: Trim the function manually.

Dwell Time:

This is a user-configurable amount of time for how long the pressure dwells before measurements are taken. Dwell is greyed out if the **Closed Loop** is set to **NO**.

Note

*Once at the setpoint and the pressure stabilizes (*Ready *is shown), the dwell countdown timer starts. Once the dwell is finished, if closed loop was used, then the measurement is taken and the controller continues to the next setpoint. If closed loop is OFF, push* ***continue*** *to go to the next setpoint.*

4. In the “Trim by Re-ranging” main menu, push F4 to start trim.
5. If the “Closed Loop” was “ON”, the trim process automatically progresses without user interaction. Otherwise, the “Closed Loop” is “OFF”.
6. Push F3 to trim, and change to next range.
7. If necessary, repeat either “Lower Range” or “Upper Range” by pushing F4 or F5 as necessary.
8. When the trim process is finished, follow the display guide “Trim Complete, Press F1 to exit”.

Note

This trim process changes the upper and lower range values to compensate the sensor’s error.

Write LRV/URV

Change the working range of a HART Transmitter by changing the LRV or URV as follows:

1. Select **Write LRV and URV**.
2. In the change menu, input the new LRV and URV values.

Note

LRV cannot be set to lower than LTL (Lower transmitter limit) and the URV cannot be set greater than the UTL (upper transmitter limit).

3. Push F4 (Send) and save the new values.
4. Push F1 to exit.

Hart Diagnostics

Some HART devices feature a self-test function that check various aspects of the transmitter such as the processor and memory when commanded. Not all HART devices have this feature. If the transmitter does have this function, the Product sends the self-test command and shows the results of the self-test on the display. If the feature is not implemented in the transmitter, no information will is shown.

Start HART Diagnostics test:

1. Select F4 (HART Tasks) on the HART Menu.
2. Select **HART Diagnostics**.
3. Push F4 to start.
4. HART Diagnostics Results dialog is shown. Errors or faults (if any) are shown if occurred.

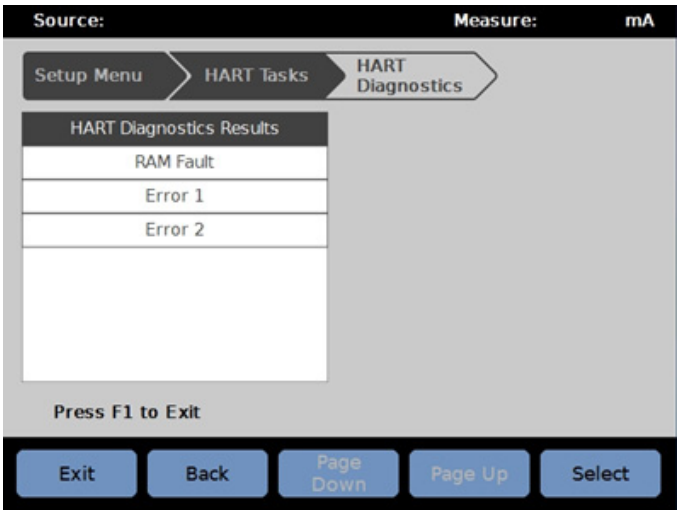

hwr012.jpg

Write PV Unit

Changes the Primary Variable (pressure unit) of the transmitter.

Note

This can also be changed in the HART Data menu.

1. Push F4 (HART Tasks) on the HART menu.
2. Select **Write PV Unit** and push F5 to open the PV unit menu.
3. Select the new unit.
4. Push F4 (Send).
5. Push F1 to exit.

Write Tag

Write the short tag (max 8 characters) or long tag (max 32 characters) as follows.

Note

This can also be changed in the HART Data menu. Short tag is supported by HART revision 5 and above. Long tag is supported by HART revision 6 and above.

1. Push [F4] (HART Tasks) on the HART menu.
2. Select **Write Tag.**
3. Select **Short Tag** or **Long Tag** and then push [F5].
4. Use the on-screen keyboard to type tag.
5. Push [F3] to save.
6. Push [F4] to send.

Write Message

To write the message (max 32 characters):

Note

This can also be changed in the HART Data menu.

1. Select [F4] (HART Tasks) on the HART menu.
2. Select **Write Message**.
3. Use the on-screen keyboard to type the tag.
4. Push [F4] (Send).
5. Push [F1] to exit.

Description

To write the description (max 16 characters):

Note

This can also be changed in the “HART Data “menu.

1. Push [F4] (HART Tasks) on the HART menu.
2. Select **Write Description**.
3. Use the on-screen keyboard to type the tag.
4. Push [F4] (Send).
5. Press [F1] to exit.

HART Data

HART data shows more complete data about the transmitter model, hardware and software revision numbers, and many coefficients. From the device screen push the F2 and F3 softkeys to access the **HART Information** screen. Some data is read-only and cannot be selected. Some data is writable. See Figure 15

To view and change HART Data:

1. Push F5 (HART Data) on the HART menu.
2. Use the navigation keys to navigate between the fields. The data fields that can be edited are the only fields that can be selected.
3. Select the data to change and enter the information.
4. Push F4 (Send) then exit.

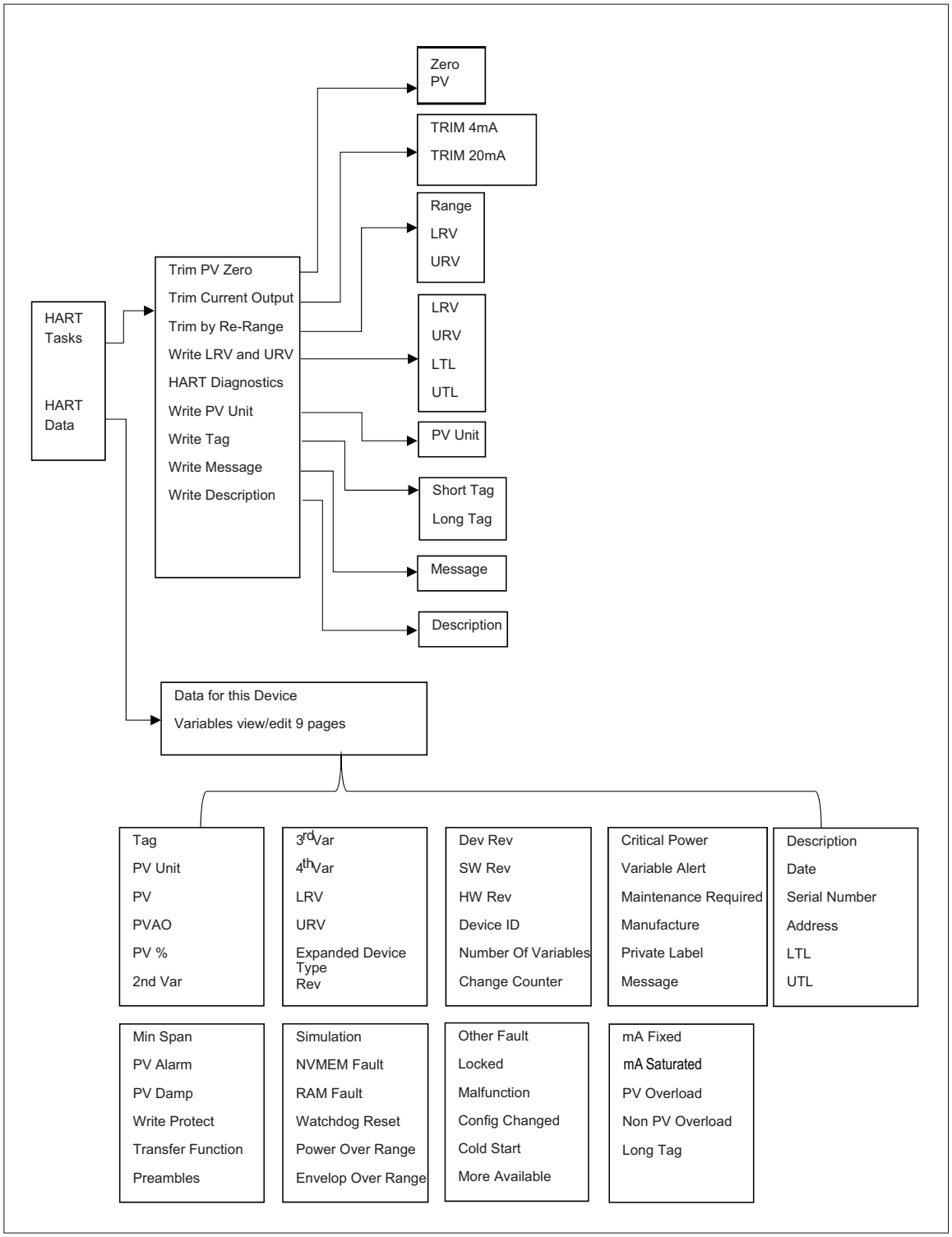

hwr028.eps

Figure 17. HART Tasks Menu Tree

mA/VDC

The EMM provides measurement for purpose of dc mA, dc V, and dc mA with 24 V loop power (for transmitting and measurement/HART).

Enable mA/VDC Function

1. Push the **mA/VDC** softkey to go into electrical measurement mode.
2. Choose the measurement mode as requirement.

Push [F4] to change mode for **VDC** or **mA**. In mA measurement mode, push [F5] to enable/disable 24V loop power for transmitter.

VDC measurement

In VDC measurement mode, the Product measures the input dc voltage from 0 V to 30 V.

1. Push [F4] (mA/VDC) to go into **VDC measurement** mode.
2. Connect the test leads with the EMM input terminals

The V dc measurement value shows in the **MEASURE** field of display.

Note

Using this mode will turn off 24 V Loop power.

mA Measurement

In the “mA measurement without 24V” mode, it measures dc current only.

1. Push [F4] (mA/VDC), to go into mA dc current measurement mode.
2. Connect the test leads with EMM input terminals; be aware of the positive/negative direction.
3. Push [F5] “Toggle 24V LOOP OFF” On or off. The loop power is off by default to protect the UUT.
4. The dc current measurement value shows in the MEASURE field of the display.

Contamination Prevention System (CPS)

Note

Maximum working pressure (MWP) of the CPS is 20 MPa (3,000 psi.)

The Contamination Prevention System (CPS) is a Product accessory that protects the Product from contamination from the UUT.

The CPS accomplishes this through these methods:

- The CPS is electrically connected to the Product. On downward pressure excursions, the Product releases the pressure through its vent valve. While the precise pressure control is done in the Product, the major change in pressure is accomplished through the Product. This results in uni-directional flow between the Product and the CPS.
- Substances from the UUT drop into a sump system that uses gravity to trap any liquids. The sump is routinely purged when the system is vented.
- The CPS includes both a 25 micron screen and coalescing filter.

⚠Caution

To prevent damage to the Product:

- **Do not use the CPS if it is not turned on in the Settings.**
- **Service the filters regularly. Service frequently if the UUT has a large amount of fluid in it or is very dirty.**
- **Do not let the fluid in the bottle fill to the top.**

⚠Warning

To prevent injury:

- **Do not use CPS with flammable or combustible liquids.**
- **Only use the CPS with a pressure controller rated for no greater than the MWP of the CPS 20 MPa (3,000 psi).**

Install the CPS

To install the CPS:

1. Place the CPS on a solid surface near the Product. The CPS is heavy enough to sit on a bench and if desired, can be bolted to a bench. See Figure 18 for connections. Observe the correct polarity of the connector to the Product (the brown wire should be on the left of DRV3).
2. Connect the electrical cable from the CPS to the DRV1, DRV2, and DRV3 connections on the back of the Product. The connector ensures that the CPS is connected correctly. See Figure 18.
3. Connect the test port of the Product to a pressure port on the top of the CPS and cap the other test port with the hand tight cap.
4. On the Product, select (SETUP **>Instrument Setup>CPS**). When CPS is enabled, the LED indicator on the CPS fixture lights green.

⚠Caution

To avoid Product damage, the CPS must be enabled or the Product will be exposed to contamination.

Do not use the CPS unless the LED is illuminated. Turning off the CPS is not an acceptable way of bypassing the CPS.

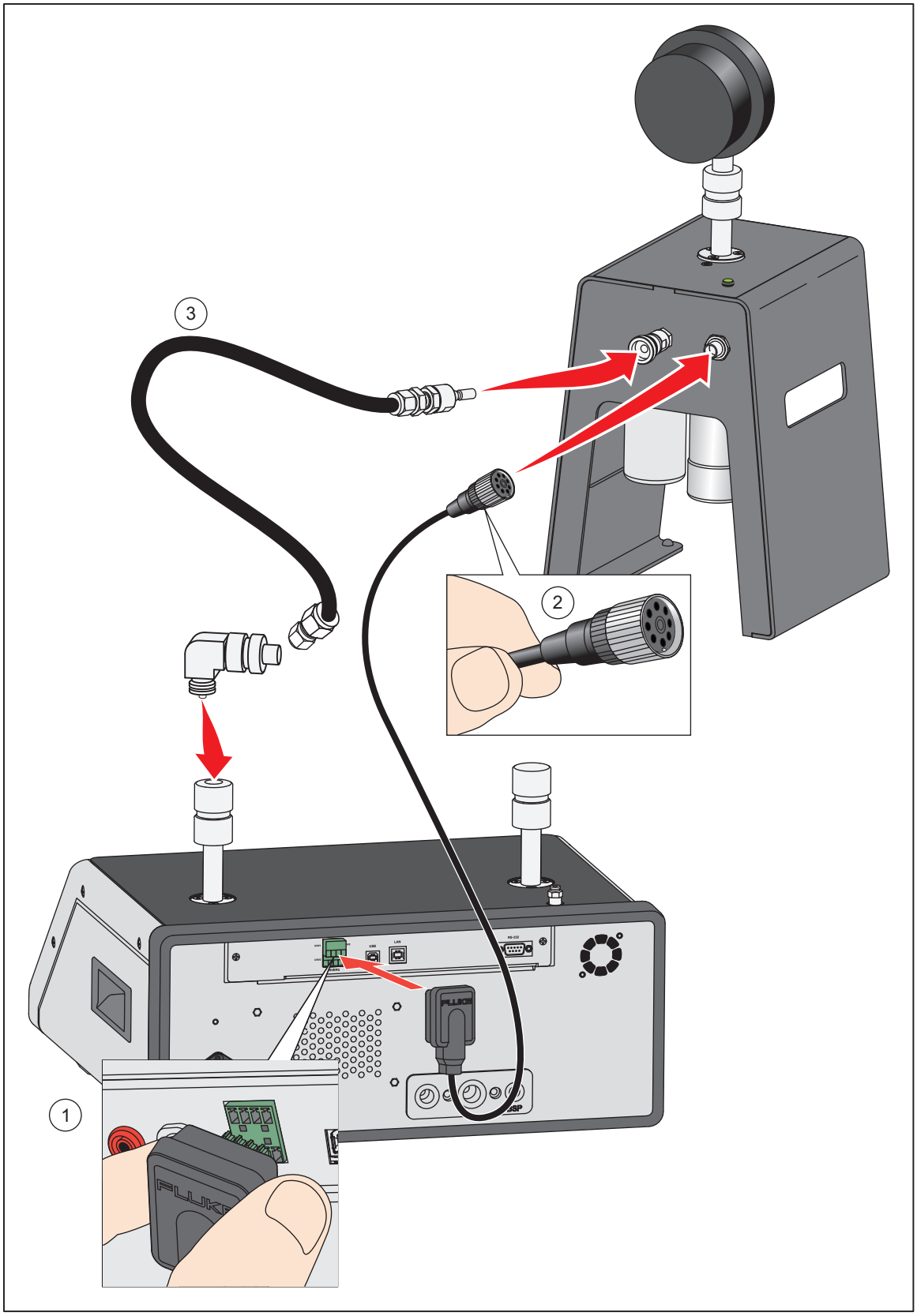

hwr023.eps

Figure 18. CPS Driver and Manifold Connections

CPS Use

To use the CPS, connect the UUT to the top test port on the CPS using the same method as described in the *Connect a UUT* section.

⚠Caution

To prevent Product damage or damage to a gauge:

- **DO NOT use PTFE tape on these connections. This prevents a correct seal. The gauge adapter sealing system can be hand-tight sealed up to 20 MPa (3000 psi). Wrenches or similar tools are not required. Over tightening can cause damage to threads or sealing faces.**
- **Before connection, ensure that there is an O-ring fitted to the test port.**
- **Check that the sealing face of the device to be fitted is clean and undamaged, as scratches or dents can form leak-paths.**

Note

The threads on the test port, and the lower part of the gauge adapters are left-handed.

1. Screw on the appropriate gauge adapter to the UUT, see Figure 19.

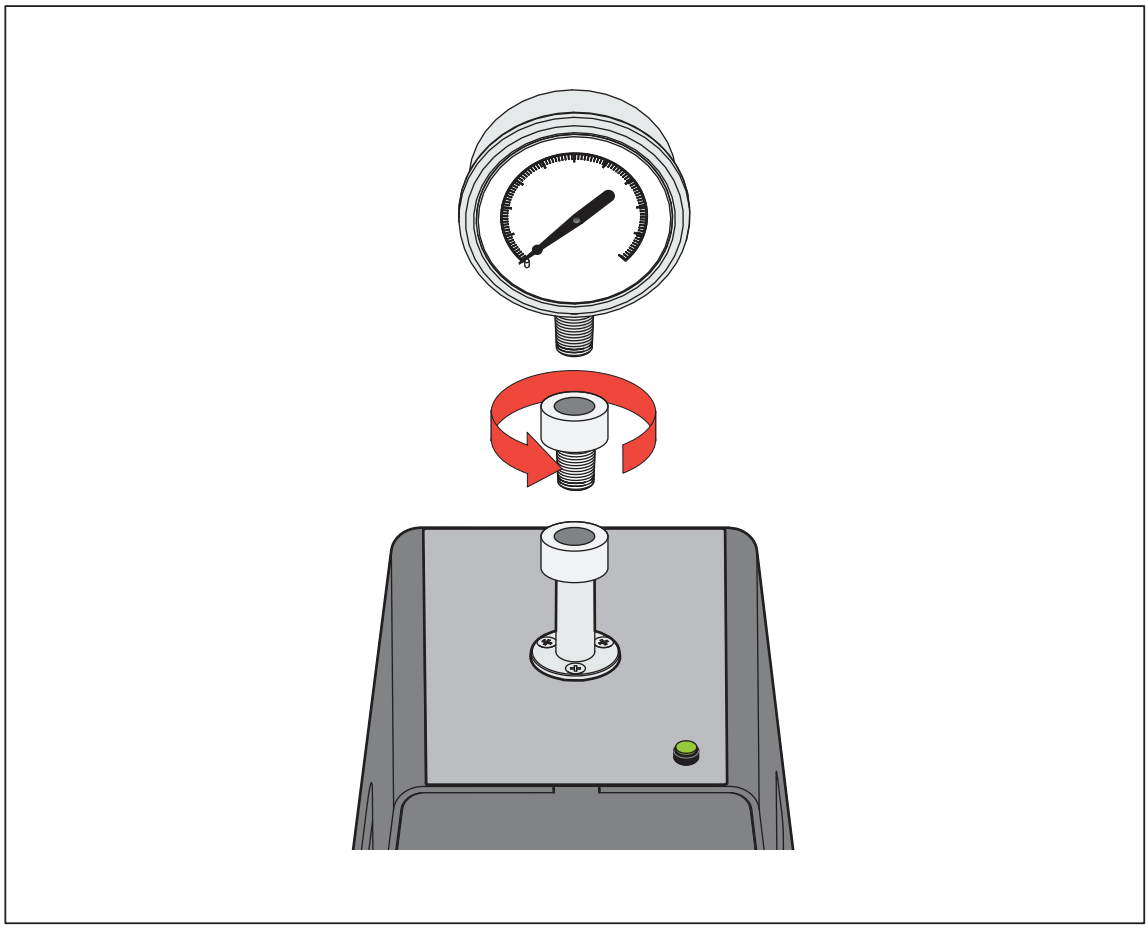

hwr034.eps

Figure 19. Screw on Gauge Adapter

2. Screw down the assembly COUNTER-CLOCKWISE on to the test port, see Figure 20.

Note

Hand-tight is sufficient. Ensure that the bottom face contacts the O-ring on the test port.

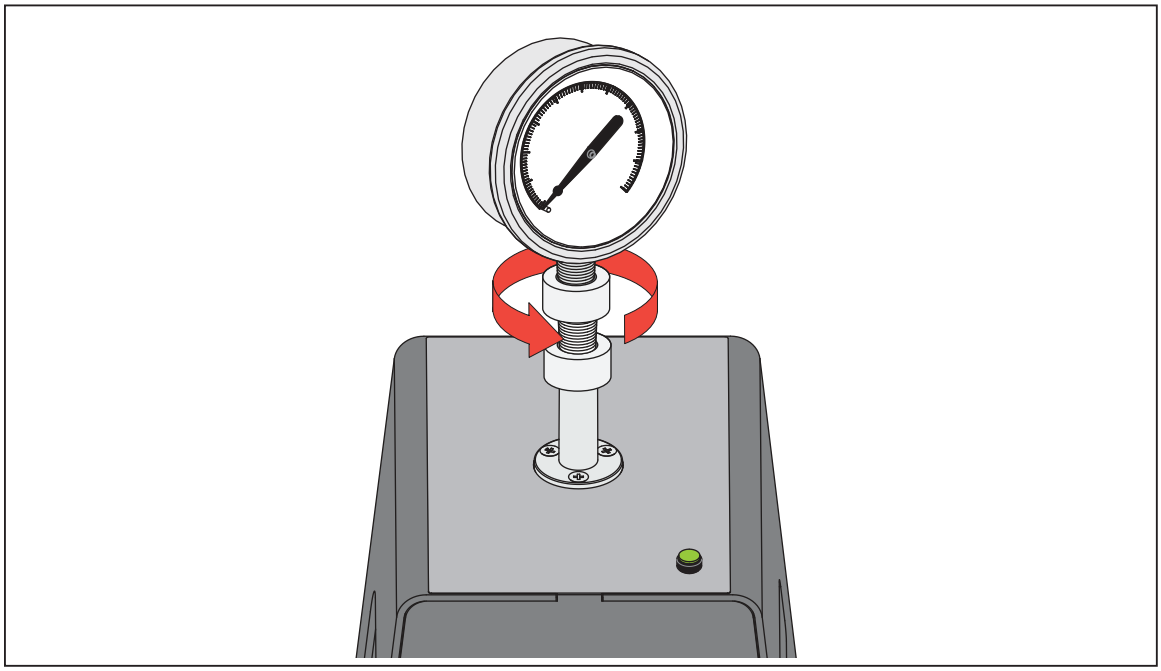

hwr035.eps

Figure 20. Connect Assembly to Test Port

3. To adjust the position to face forward, hold the gauge adapter and turn the instrument COUNTER-CLOCKWISE, so that it faces forward, see Figure 21.

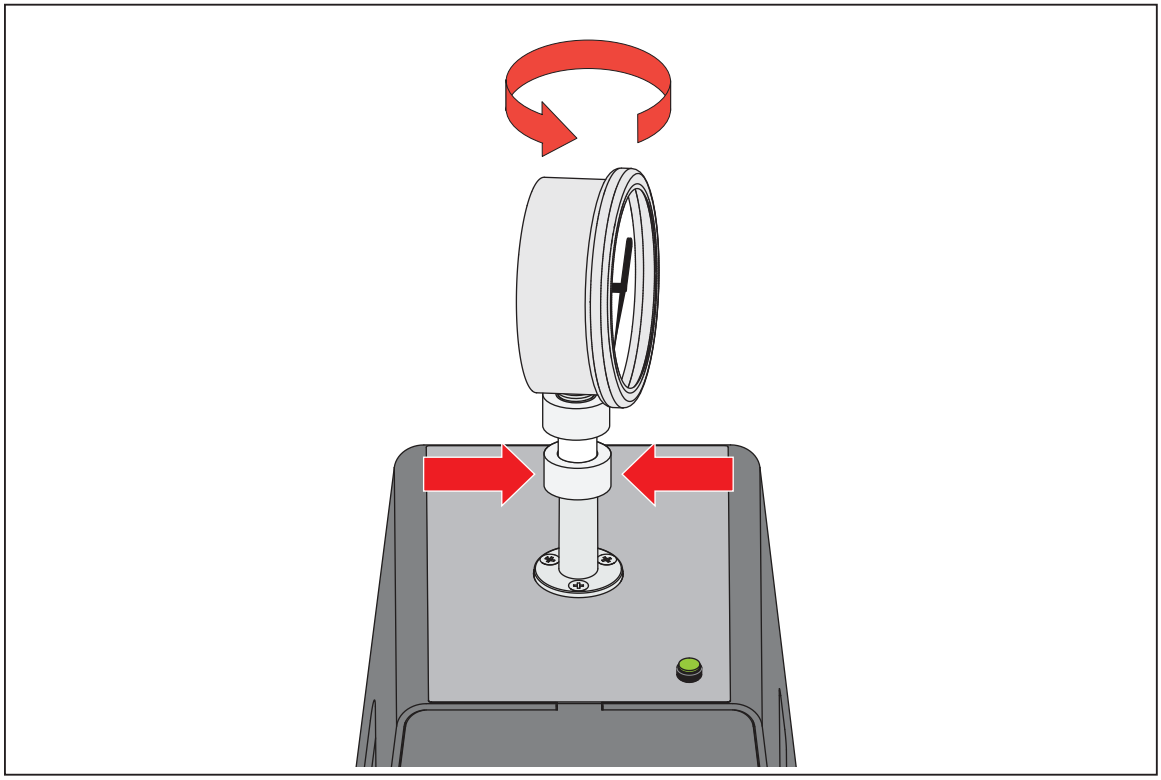

hwr036.eps

Figure 21. Adjust Gauge Position

4. Hold the instrument steady, while turning the gauge adapter COUNTER-CLOCKWISE until it pulls down onto the O-ring, see Figure 22.

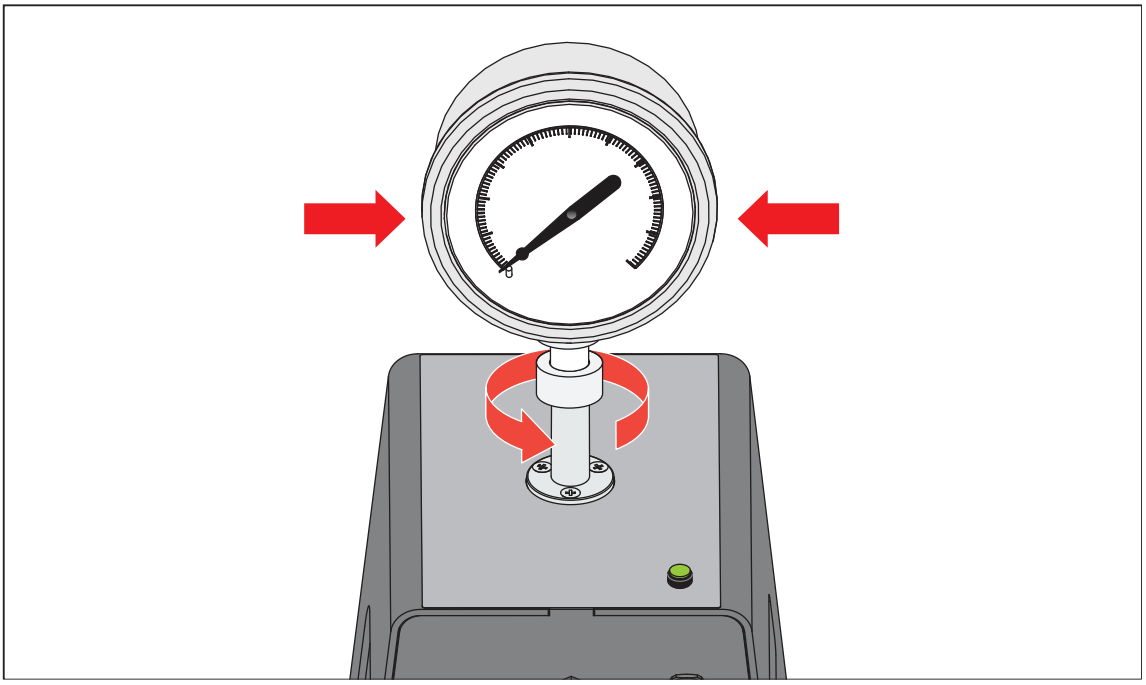

hwr037.eps

Figure 22. Tighten Gauge

Test Port Insert

For devices with 1/8 BSP or NPT mounting threads, the diameter of the thread is very close to the effective sealing diameter of the O-ring fitted to the test port. See Table 18 and Figure 23.

This can make it difficult to achieve a good seal. When mounting these devices, use the test port insert (stored in the spare seals container).

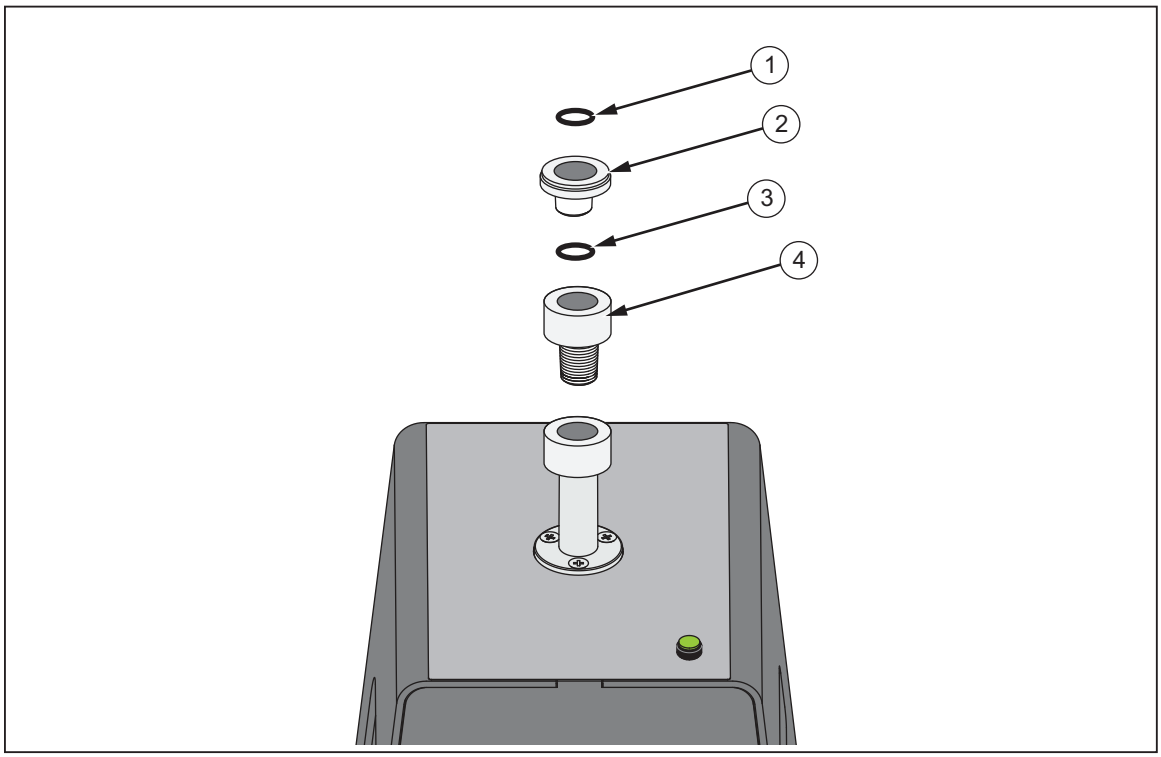

hwr038.eps

Figure 23. Test Port Insert

Table 18. Test Port Inserts - Parts List

Item	Description	Part
1	O-ring	3865163
2	Test Port Insert	3919892
3	O-ring	3865195
4	Test Port	4542465

To calibrate panel-mounted gauges with pressure connections in the rear, use an Angle Adapter such as the Fluke P5543. The Product operates the CPS without any further interaction required by the operator.

Disconnect the CPS

To disconnect the CPS:

1. Vent the system.
2. Disable the CPS in the settings. It is important that the CPS is disabled in the firmware before it is physically disconnected from the system. Failure to do so could result in the system not being able to vent pressure.
3. Once disabled in the firmware, the CPS can be disconnected both electrically and pneumatically.

CPS Cleaning

The CPS requires periodic cleaning. To clean the CPS, see Figure 24:

1. Vent the CPS.
2. Remove the waste bottle ③ from the side opening of the CPS bracket and safely dispose of the contents.
3. Drop the sump.
4. Pull down the filter assembly.
5. Unscrew the lower screen retainer ① from the bottom of the filter assembly.
6. Pull out the screen ② and rinse with soapy water or alcohol.
7. Inspect the coalescing filter. If saturated with oil particles, it needs to be replaced. The coalescing filter cannot be cleaned.
8. Reverse these steps to reassemble the CPS.

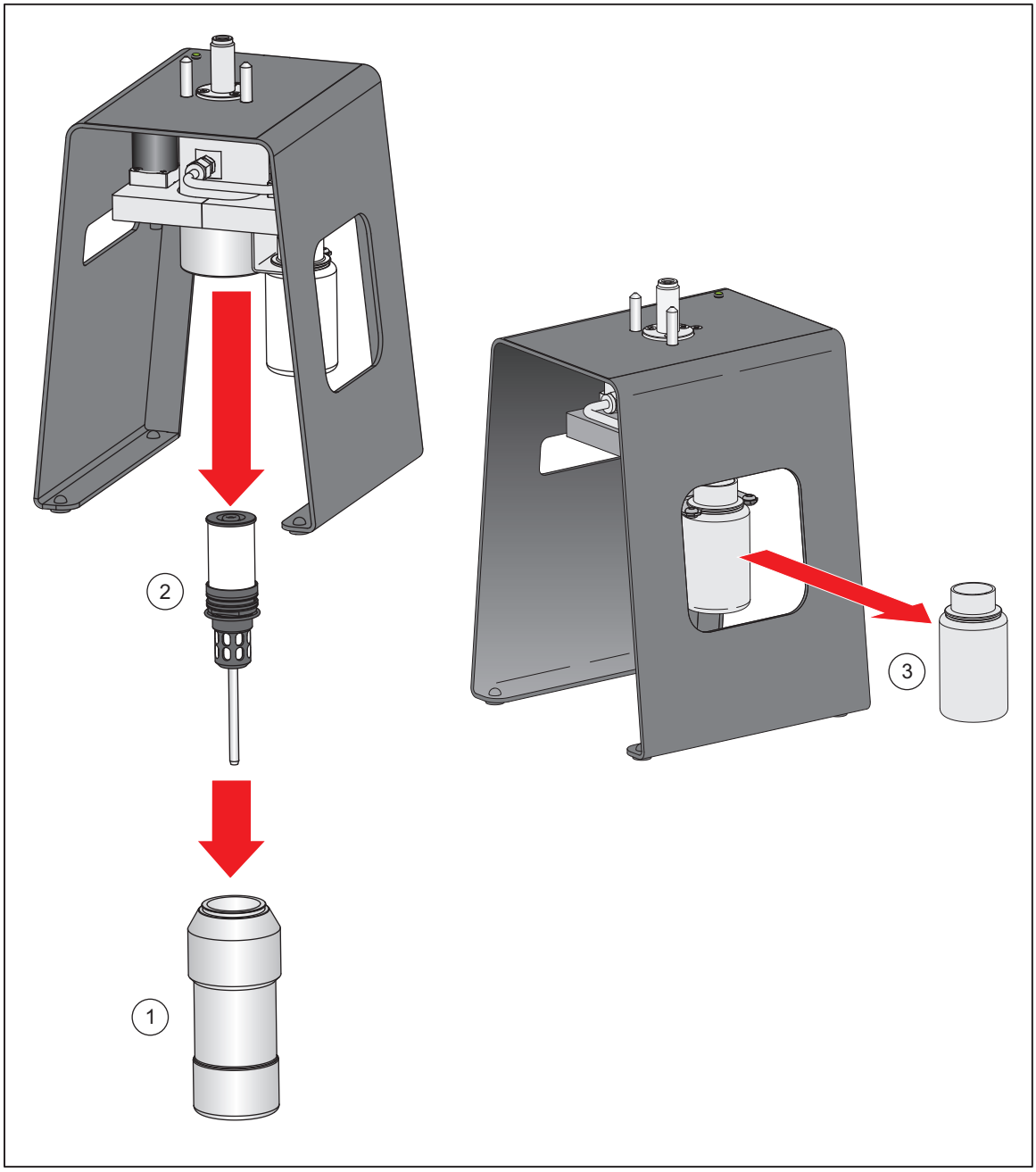

hwr026.eps

Figure 24. Clean the CPS

External Driver Communication

The Product has four external 24 V dc powered drivers. These drivers support several optional accessories and can support the driving of solenoids for customized solutions. Use the display and remote interface to set driver status.

Each driver is a low-side switched 24 V dc component. Each Channel includes a PTC-type resettable fuse.

Maximum continuous power per channel is 10 W and total continuous power maximum for all 4 channels combined is 24 W. See Figure 25.

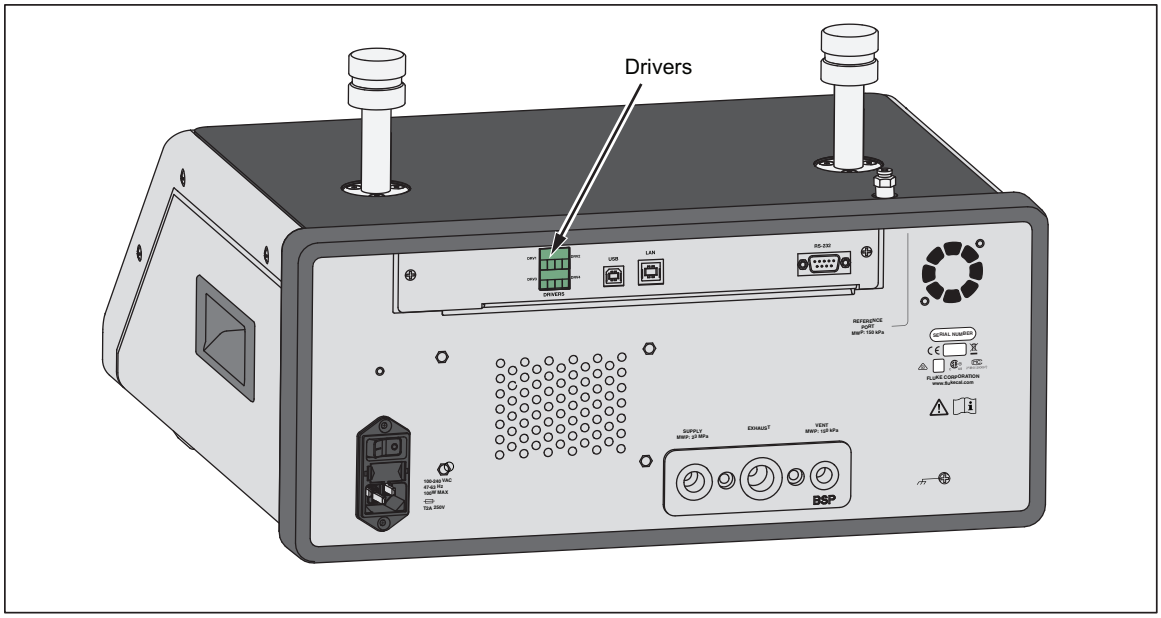

hwr008.eps

Figure 25. Drivers

Configure the Drivers

Turn on the CPS and/or isolation valve accessories from the Instrument Setup menu (SETUP **>Instrument Setup**). Both require the correct pneumatic connections and electrical connections. Select the **External 24V** tab to see or set the state of the external drivers.

Drivers are identified in the External 24V menu and on the rear panel of the Product as DRV1, DRV2, DRV3, DRV4 (see Figure 26). Each solenoid uses two wires, one wire goes into each connector.

- DRV1 uses the two top left inputs
- DRV2 uses the two top right inputs
- DRV3 uses the two bottom left inputs
- DRV4 uses the two bottom right inputs

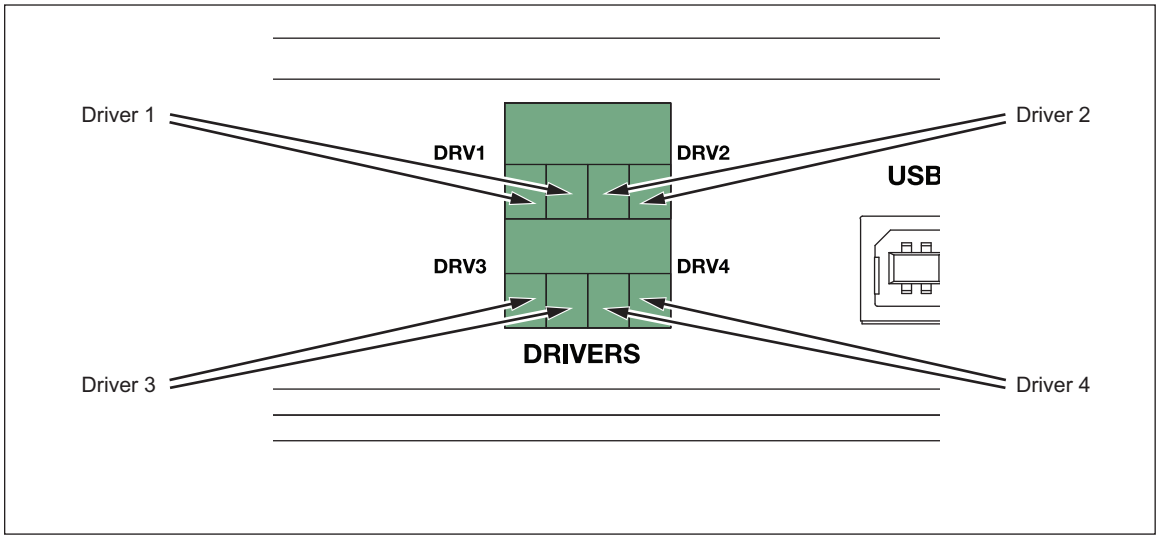

hwr042.eps

Figure 26. Driver Location

Several of the drivers support specific accessories such as the CPS. If a CPS is not being used, these drivers can be used for other uses as required.

- DRV1: CPS final purge below 170 kPa (25 psi)
- DRV2: CPS pulsed downward control above 170 kPa (25 psi)
- DRV3: CPS LED
- DRV4: Auxiliary

The External 24 V menu (SETUP**>Instrument Setup**>**External 24V)** also shows the driver states for any auxiliary chassis when working in a system with multiple chassis.

The Product modulates the solenoid drive to reduce power consumption during continuous use.

Figure 27 shows the status of the drivers.

- On is designated by a light green indicator (DRV3)
- Off is designated by a dark green indicator (DRV1, DRV2, DRV4)

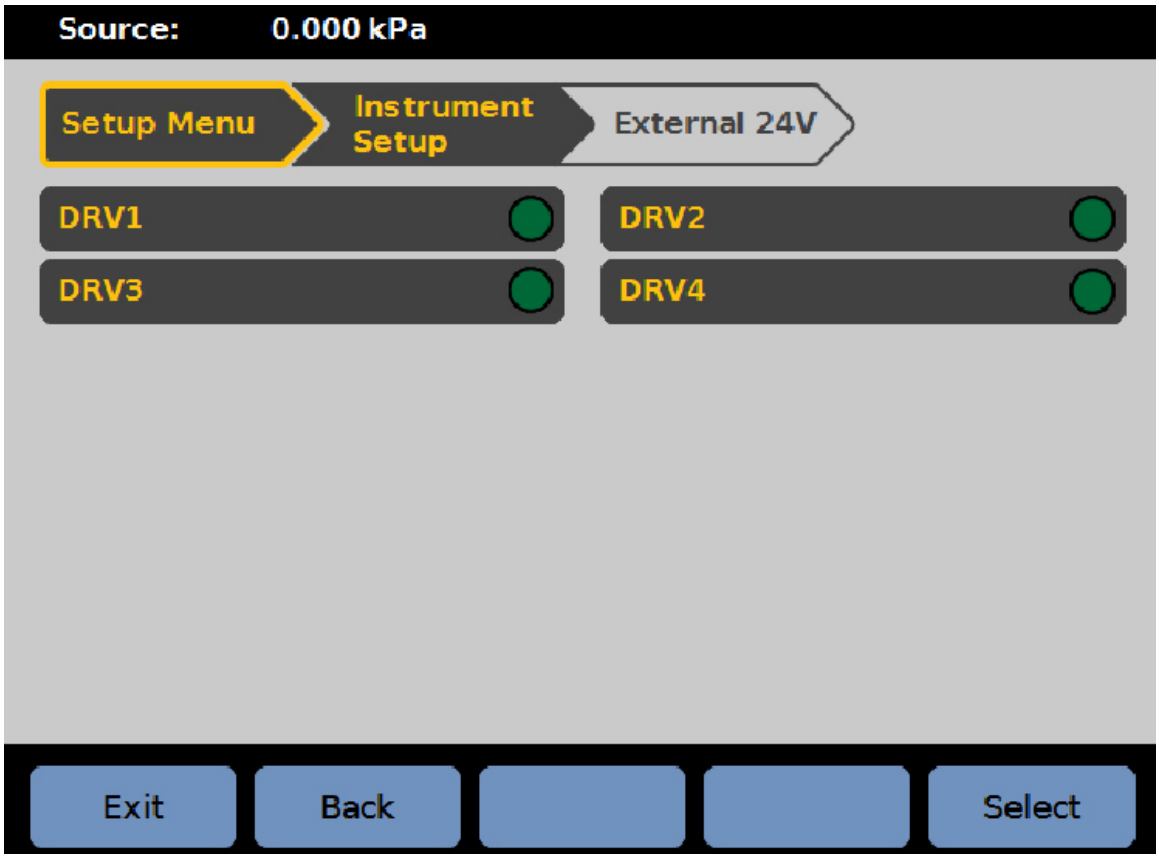

hwr011.jpg

Figure 27. External 24V Screen

If drivers are dedicated to a given accessory, then DRV number is greyed out and the status cannot be altered with the UI.

In Figure 27, the CPS is installed so DRV1, DRV2, DRV3 are greyed out. If the isolation valve option is installed, DRV4 is greyed out.

Driver Electrical Connections

The CPS uses 3 drivers (Drivers 1-3). The CPS indicator LED connects to DRV3. For more information about the CPS. See the *Contamination Prevent System (CPS)* section. For connections, see Figure 28.

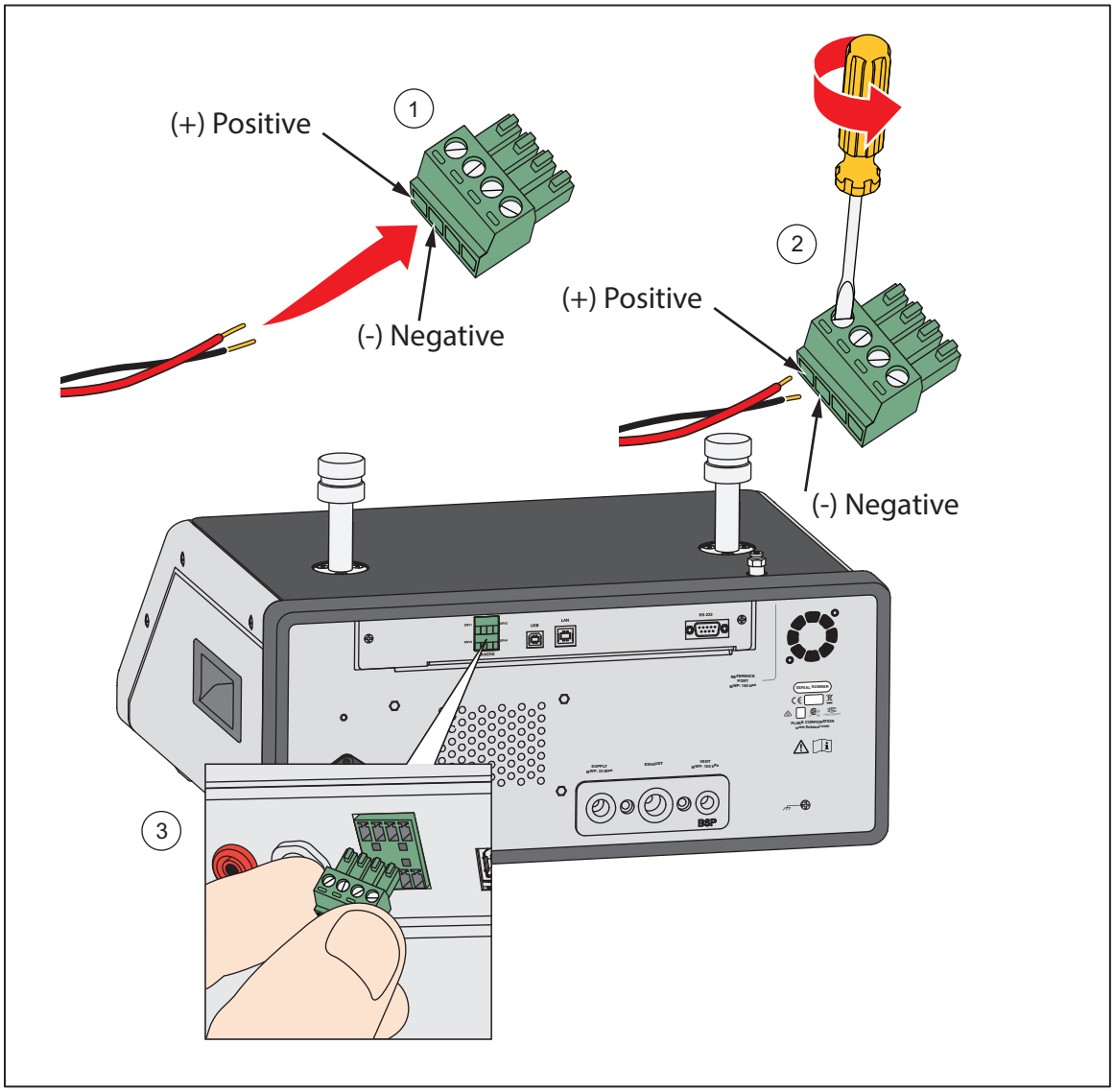

hwr006.eps

Figure 28. Driver Connections

Maintenance

This section explains routine operator maintenance necessary to keep the Product in optimal condition. For intensive maintenance tasks, such as troubleshooting or repair, see the *2271A Service Manual*. The Service Manual also contains the calibration adjustment procedures. See the *Contact Fluke Calibration* section for more information.

Clean the Exterior

To clean the Product, wipe it with a cloth that is lightly dampened with water or mild detergent. Do not use aromatic hydrocarbons, chlorinated solvents, or methanol-based fluids. To clean the display, use a soft cloth lightly dampened with alcohol.

⚠Caution

Do not use aromatic hydrocarbons or chlorinated solvents for cleaning. They can damage the plastic materials used in the Product.

Fuse Replacement

Access the fuse from the rear panel. The fuse rating label below the fuse holder shows the correct replacement fuse ratings for each operating voltage.

⚠⚠Warning

To prevent possible electrical shock, fire, or personal injury:

- **Turn the Product off and remove the mains power cord. Stop for two minutes to let the power assemblies discharge before you open the fuse door.**
- **Use only specified replacement fuses, see Table 19.**

To replace the fuse, refer to Figure 29:

1. Disconnect the mains power cord.
2. With a standard screwdriver, release the fuse holder door.
3. Pull out the fuse holder.
4. If necessary, replace the fuse.
5. Reinsert the fuse holder.
6. Close the fuse holder door.

Table 19. Replacement Fuses

Fuse Description	Fluke Part Number
⚠ FUSE 2A 250V LONGSB 5X20MM	2081170

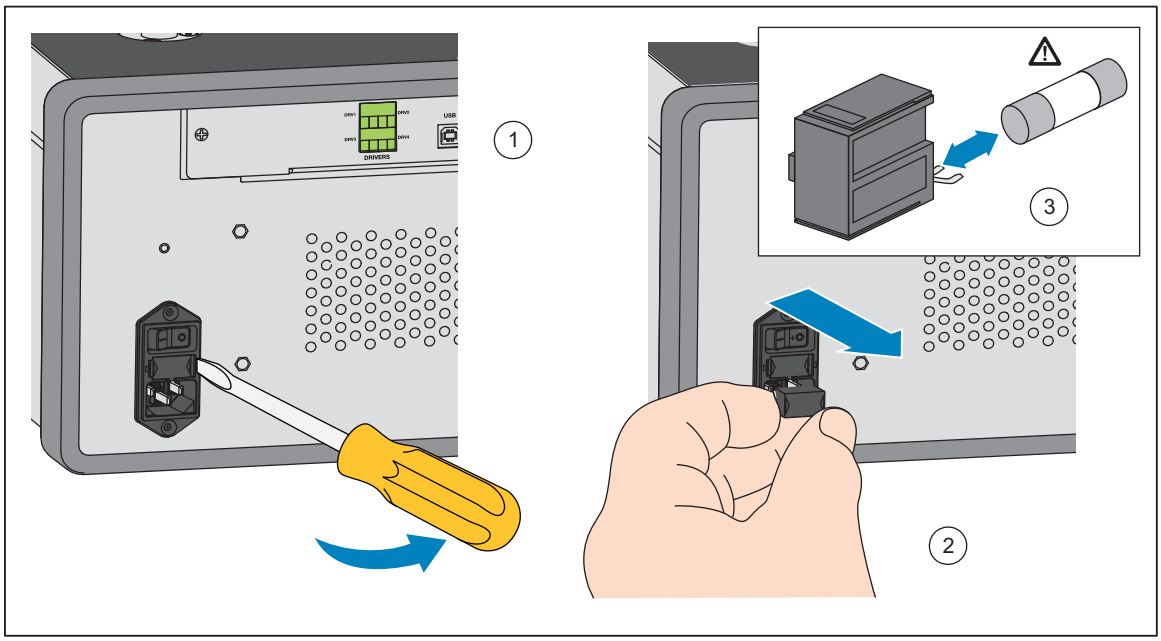

Figure 29. Access the Fuse

Manifold Replacement

The Product rear-panel manifold is removable. The removable manifold lets the user:

- Change pre-configured manifold-connection setups easily (leave hoses and inputs connected when necessary).
- Easily replace a manifold if the port threads are damaged.

To remove or replace the manifold:

1. Loosen the four manifold bolts.
2. Pull the manifold out.
3. Replace the manifold and tighten the four bolts, torque: 6.2 N m (55 lbf in). See Figure 30.

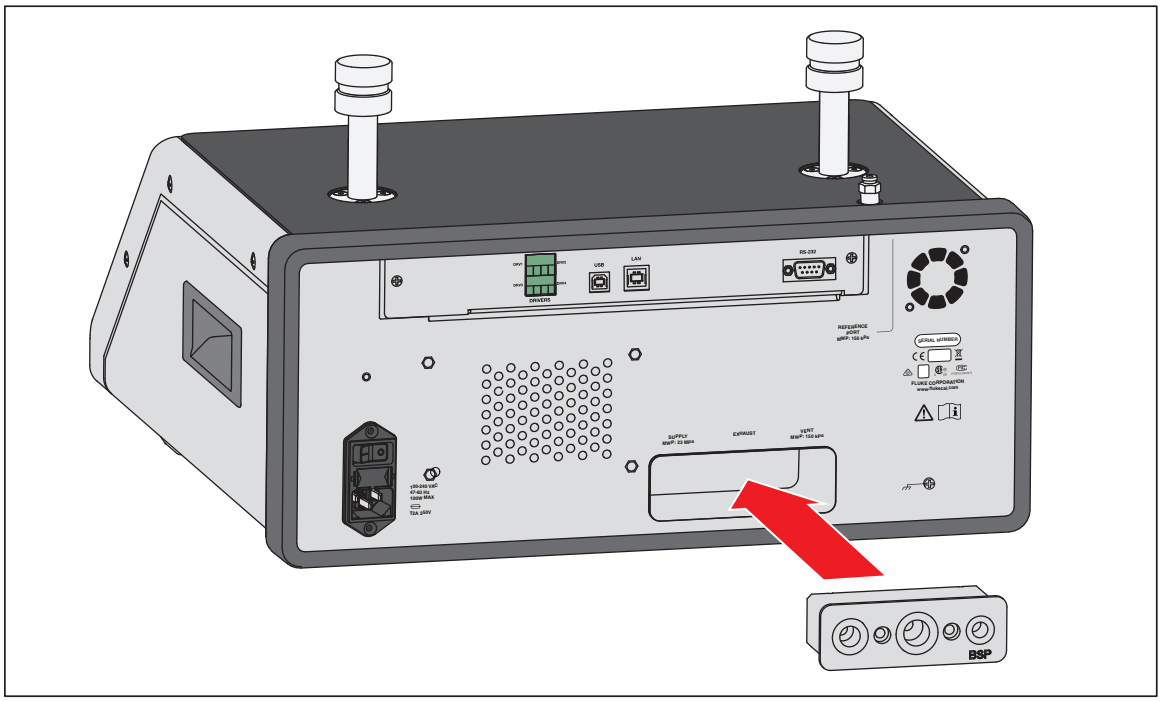

hwr003.eps

Figure 30. Manifold Installation

Reset Controller Settings

Some of the Setup menus have a reset button that reset the settings on the current menu to the default values. Reset only resets the settings on the screen being viewed and no others. This is a helpful troubleshooting tool in case an accidental change was made to the values.

A factory reset function is available in the Instrument Setup Menu that when pushed, resets the Product to its original factory settings.

Diagnostics

The Diagnostics menu provides helpful system information, tools, and functions to help troubleshoot and keep the system in good working operation.

Note

If the Product is configured as a system, the Diagnostics menu shows all of the controllers connected to it in the Diagnostics menu.

The Diagnostics menu has these sections:

- **System**
- **Measure**
- **Control**
- **Remote Interface**

System

The **System Diagnostics** menu provides information on these system components:

Test Port Vent Valve and **Ref Port Vent Valve** – These are normally-closed isolation valves installed on the internal pressure manifold. When the system is in the Vent mode, these valves should be open. In other modes, such as Control and Measure, the valves should be closed. If the status is different than that described, the valve may be malfunctioning.

Ref Port Vent Valve – This is a normally-closed isolation valve installed on the internal pressure manifold. When in the Gauge measurement mode, the valve is closed. When in Absolute or Tare, the valve is open. If the status is different than that described, the valve may be malfunctioning.

Measure

The Measure diagnostics menu provides information on each PMM connected:

PMM – This is the PMM range and name.

Pressure – This is the pressure measured by the sensor in the PMM.

Temperature – This is the ambient temperature inside the PMM. The temperature inside the PMM can be as much as 5 °C higher than room temperature during normal operation.

Test Valve and Ref Valve – This is a normally-closed isolation valve installed on the internal pressure manifold in front of each PMM. The test valve isolates pressure to the PMM and is controlled by the internal software. When a PMM is selected in the Module Selection menu, the test valve should be open. For manual testing and troubleshooting, select a single PMM and test the valve. In other modes such as Fast and Auto, the Product opens and closes the valves based on a control algorithm. If the status is different than that described, the valve may be malfunctioning. See the Service Manual for replacement instructions.

The menu also has a Pneumatic self test function located at the bottom of the menu that automatically tests each PMM to see if the valves are opening and closing properly. The system controls pressure as necessary and monitor the valve states. If a valve is not functioning properly, an error with information is shown that indicates which valve is malfunctioning.

Control

The Control Diagnostics menu provides information about the PCM:

Port Pressure – This menu shows the pressure measurement at the test port, supply port, and exhaust port.

Control Module – This menu shows the PCM model number, serial number, and firmware revision.

Control Coefficients – This menu shows the control coefficients (C0) the PCM is using. To change the coefficients, tune the PCM using the Autotune function located in this menu.

Autotune – The Autotune function is a fully automated procedure that runs the Product through a series of pressures across its ranges. The Product then changes the control coefficients to provide the best control performance. Use Autotune only when the control performance is unacceptable. The system must be leak free, have sufficient volume, and all items on the test port must be rated for the maximum pressure of the system.

Remote Interface

The Remote Interface Diagnostics menu provides information on remote communication by monitoring the input and output communication. The menu contains independent diagnostics for RS-232, USB, and Ethernet.

RS-232 – Shows the Receive and Transmit data for this interface.

USB – Shows the Receive and Transmit data for this interface.

Ethernet – Shows the Receive and Transmit data for this interface.

- Receive
- Transmit
- Fault

Troubleshooting

Table 20 explains minor troubleshooting issues. For issues outside of the scope of this section, the Product may require service. See *Contact Fluke Calibration.*

Table 20. Troubleshooting

Problem	Probable Cause	Action
Electrical Problems		
Product does not turn on	Not plugged in	Verify Product is plugged in and power is available.
	Power not available	Check the fuse per instruction in this manual.
	Fuse blown	Verify the main power switch is ON.
		Check the fan. If the fan is on or solenoid click is heard, see the “Display does not turn on” problem.
		If the fan is not on, have the power supply serviced. Verify internal power connections.
Display does not turn on	Chassis power issue	Verify that power is supplied, see above.
	Screen saver is activated	Verify power to front panel. ABORT and ⏻ should be lit.
	Power plug to back panel is loose	Verify the ⏻ is in the ON state.
	Display panel failure	Open front panel and verify the power plug is connected to the front panel.
Electrical Problems		
Rear panel drivers not operating	Loose connection	Inspect the connection.
	Exceeded maximum power rating	Allow internal fuse to cool and retry. Verify the rating of the external solenoids.
		Limit current of external solenoids.
EMM Function Problems		
No electrical measurement is shown	EMM not installed	Install EMM (see *Module Installation*)
	Wrong connection between UUT and Product	Connect UUT to Product with correct “+” and “-“ terminal.
	Measurement over range	Make sure the input current of voltage is within the measurement range (0 mA-24 mA, 0 V-30 V).

Table 20. Troubleshooting (cont.)

Problem	Probable Cause	Action
Pressure Generation or Indication Problems		
Product will not enter control mode	Modules not installed (PCM and 1+ modules)	Verify modules are properly installed.
	PMMs not fully installed	Follow steps outlined in *Module* Installation to ensure that all modules are properly installed.
	No pressure supply	Apply proper supply pressure.
	System in remote operation mode	
No pressure measurement is shown	PMM not installed	Install a PMM (see *Module* Installation).
Pressure Generation or Indication Problems		
Product does not reach target pressure	Pressure supply too low	Verify pressure supply, perform leak check.
	Leak	Verify Test port is leak tight.
	Valves require service	Send the Product to Fluke Calibration for repair.
	Target pressure set higher than the highest ranged PMM.	Install a PMM with the appropriate range.
	Slew Rate set to zero	Increase slew rate.
While using measure mode, pressure is leaking	No supply pressure	Provide supply pressure if not connected.

Table 20. Troubleshooting (cont.)

Problem	Probable Cause	Action
Product does not control down	Blocked exhaust port	Remove shipping plugs or excessive restriction.
	Setpoint applied below atmosphere	Connect vacuum pump.
	Slew Rate set to zero	Increase slew rate.
No remote communications	Communication settings are not correct	See *Remote Port Menu.*
	Improper command syntax	Verify cable type (null modem).
	Cables are the wrong type or not properly connected	Use the correct cables and connections.
	Confirm setting in the Product	

Table 21. EMM Function Troubleshooting

Problem	Probable Cause	Action
No electrical measurement is shown	EMM not installed	Install EMM (see *EMM and PMM Module Installation*).
	Wrong connection between UUT and controller	Connect UUT to controller with correct “+”, “-“ terminal.
	Measurement over range	Make sure that the input current or voltage is within the measurement range (0 mA to 24 mA, 0 V to 30 V)

Error Codes

If an error occurs during Product operation or control, an error message is shown on the display. Errors can be caused by:

- Incorrect control that uses the front panel, (for example, attempts to force a prohibited mode or overloading of output terminals)
- Product fault.

These messages are shown in Table 22. All error messages are shown in a frame that overlaps the main screen.

Table 22. Error Codes

Error ID	Error Number	Error Message
ERR_DEVICE_NO_RESPONSE	900	Error 900: Device No Response
ERR_DEVICE_DISCONNECTED	901	Error 901: Device Disconnected
ERR_MESSAGE_TOO_LONG	902	Error 902: Message Too Long
ERR_MESSAGE_TOO_SHORT	903	Error 903: Message Too Short
ERR_URVLRV_OVERFLOW	904	Error 904: URV/LRV Overflow
ERR_LRV_TOO_LOW	905	Error 905: LRV Too Low
ERR_LRV_TOO_HIGH	906	Error 906: URV Too High
ERR_URV_TOO_LOW	907	Error 907: URV Too Low
ERR_URV_AND_LRV_OUTOF_LIMITS	908	Error 908: URV And LRV Out Of Limit
ERR_INVALID_LOOP_mA	909	Error 909: Invalid Loop Current
ERR_INVALID_UNIT	910	Error 910: Invalid Unit
ERR_INVALID_COMMAND	911	Error 911: Invalid Command
ERR_INVALID_ADDRESS	912	Error 912: Invalid Address
ERR_INVALID_SELECTION	913	Error 913: Invalid Selection
ERR_INVALID_FIXED_DATA	914	Error 914: Invalid Fixed Data
ERR_COMMAND_NOT_IMPLEMENTED	915	Error 915: Command Not Implemented
ERR_PV_OUTOF_LIMITS	916	Error 916: PV Out Of Limits
ERR_HART_WRITE_PROTECTED	917	Error 917: HART Write Protected
ERR_DEVICE_SPECIFIC_ERROR	918	Error 918: Device Specific Error

User-Replaceable Parts and Accessories

Table 23 lists the part numbers of each user-replaceable part or accessory for the Product. Product installation, training, and Gold and Silver Care Plans are also available. For more information on these items and accessories. See the *Contact Fluke Calibration* section.

Table 23. User-Replaceable Parts and Accessories

Description	Fluke Part Number	Total Quantity
Mains Power Cord - North American	284174	1
Mains Power Cord - Europe	769422	1
Mains Power Cord - UK	769455	1
Mains Power Cord - Swiss	769448	1
Mains Power Cord - Australia	658641	1
Mains Power Cord - South Africa	782771	1
Mains Power Cord - Thailand	4362094	1
Mains Power Cord - Denmark	2477031	1
Mains Power Cord - Brazil	3841347	1
2271A Safety Information	4584298	1
2271A User Documentation CD	4584280	1
⚠ FUSE 2A 250V LONGSB 5X20MM	1297149	1
Port Manifold (NPT)	4427477	1
Port Manifold (BSP)	4551654	1
EM300 - ELECTRICAL MEASUREMENT MODULE	4750647	1
5700A-2043-01,BOTTOM FOOT, MOLDED, GRAY #7	868786	4
HANDLE, POCKET PULL	2090547	2
M5-0.8 x 55mm DIN 912 A4 S/S (316) Socket Head Cap Screw	4598377	2
CAP for M20 Test Port	4629528	2
CAP for P3000 Test Port	3922202	2
PM200-BG2.5K, PRESSURE MEASUREMENT MODULE	4363844	1
PM200-BG35K, PRESSURE MEASUREMENT MODULE	4363859	1
PM200-BG40K, PRESSURE MEASUREMENT MODULE	4380037	1
PM200-BG60K, PRESSURE MEASUREMENT MODULE	4566171	1
PM200-A100K, PRESSURE MEASUREMENT MODULE	4363867	1

Table 23. User-Replaceable Parts and Accessories (cont.)

Description	Fluke Part Number	Total Quantity
PM200-BG100K, PRESSURE MEASUREMENT MODULE	4363871	1
PM200-A200K, PRESSURE MEASUREMENT MODULE	4363880	1
PM200-BG200K, PRESSURE MEASUREMENT MODULE	4363898	1
PM200-BG250K, PRESSURE MEASUREMENT MODULE	4380055	1
PM200-G400K, PRESSURE MEASUREMENT MODULE	4363906	1
PM200-G700K, PRESSURE MEASUREMENT MODULE	4363914	1
PM200-G1M, PRESSURE MEASUREMENT MODULE	4380062	1
PM200-G1.4M, PRESSURE MEASUREMENT MODULE	4363923	1
PM200-G2M, PRESSURE MEASUREMENT MODULE	4363938	1
PM200-G2.5M, PRESSURE MEASUREMENT MODULE	4380070	1
PM200-G3.5M, PRESSURE MEASUREMENT MODULE	4363945	1
PM200-G4M, PRESSURE MEASUREMENT MODULE	4380081	1
PM200-G7M, PRESSURE MEASUREMENT MODULE	4363950	1
PM200-G10M, PRESSURE MEASUREMENT MODULE	4363961	1
PM200-G14M, PRESSURE MEASUREMENT MODULE	4363977	1
PM200-G20M, PRESSURE MEASUREMENT MODULE	4363989	1
Accessories		
EMM300, Electrical Measurement Module	Contact Fluke Calibration	1
CASE-2270, Reusable Transit Case for 227x		1
CASE-PMM Shipping Case, 3 PMM Modules		1
PK-2271A-NPT-HC20, Lines and Fittings Kit		1
PK-2271A-BSP-HC20, Lines and Fittings Kit		
PK-2271A-NPT-P3K, Lines and Fittings Kit		1
PK-2271A-BSP-P3K, Lines and Fittings Kit		1
PMM-CAL-KIT-20M Pressure Measurement Module Calibration Kit, 20 MPa (3000 psi)		1
DS70-KIT-EMM, Electrical Measurement Module Docking Station		1
CPS-2270-20M-HC20, Contamination Prevent System, W/O Adapters		
CPS-2270-20M-P3K, Contamination Prevent System, W/O Adapters		1
TST-20M Test Station, 20 MPa (3000 psi)		1

Table 23. User-Replaceable Parts and Accessories (cont.)

Description	Fluke Part Number	Total Quantity
VA-PPC/MPC-REF-110 Vacuum Pump Package,110 V	Contact Fluke Calibration	1
VA-PPC/MPC-REF-220,VACUUM PUMP PACKAGE,220V		1
COMPASS-P-BAS-SNGL COMPASS Software, Pressure Calibration Software – Basic, Single User		1
COMPASS-P-ENH-SNGL COMPASS Software, Pressure Calibration Software – Enhanced, Single User		1
COMPASS-P-BAS-L COMPASS for Pressure, Additional User License, Basic		1
COMPASS-P-ENH-L COMPASS for Pressure, Additional User License, Enhanced		1
METCAL Procedure		1
Excel Spread Sheet (No pay version)		1
SK-2271A-SRVC, SEAL KIT		1
SK-2271A-USER, SEAL KIT		1
PK-ADPTR-HC20, Adaptor Set		1
PK-ADPTR-P3K, Adaptor Set		