SERVICE PARTS LIST

BULLETIN NO.
PN0006853

SPECIFY CATALOG NO. AND SERIAL NO. WHEN ORDERING PARTS		REVISED BULLETIN	DATE
MX FUEL™ Backpack Blower			Sept. 2026
CATALOG NO. MXF600	**SERIAL NO. P31A**	WIRING INSTRUCTION **See Pages 4-5**	

NAMEPLATE SPECIFICATIONS: n_0 0 - 27 000 min^{-1}(RPM)
Contains FCC ID:QOQ-BGM220S2 Contains IC: 5123A-BGM220S2

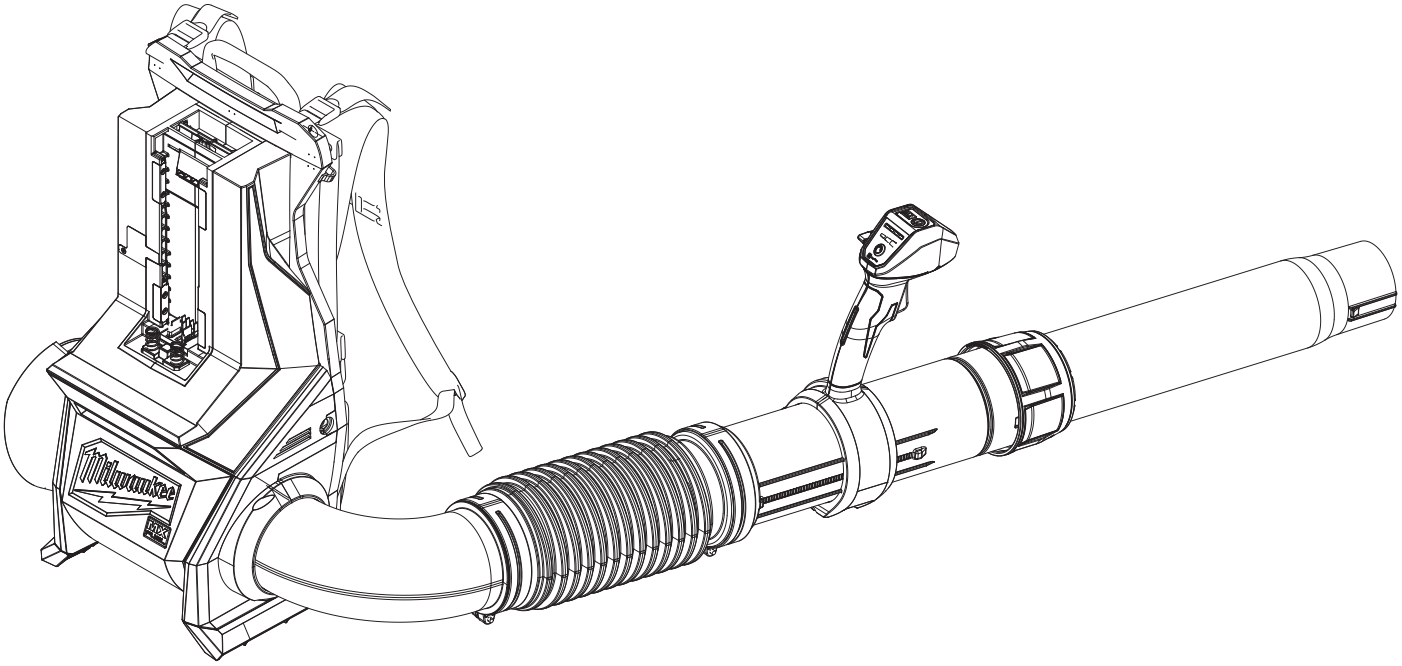

Only maintenance, service, repairs, and replacements of parts as defined in the Operator's Manual can be performed by the user.
All other repairs are to ONLY be performed by personnel authorized by MILWAUKEE TOOL. Do not attempt to install other parts; this COULD void your tool warranty.

For service, parts, or inquiries, contact us:

- Customer Service at 1.800.SAWDUST (1.800.729.3878)
- E-Service tool repair at: www.milwaukeetool.com/e-service
- Find a local authorized MILWAUKEE service location at Milwaukeetool.com
- Find a MILWAUKEE *factory* Service Center Location or MILWAUKEE *factory* Central Repair Center at Milwaukeetool.com. Send the following, prepaid and insured:
  - Your name, address, and phone number
  - Description of the issues
  - Copy of the proof of purchase
  - Tool, charger, and batteries involved with the issues

MILWAUKEE *factory* Central Repair Centers:

MILWAUKEE TOOL
Central Repair
1401 Sycamore Avenue
Greenwood, MS 38930

MILWAUKEE TOOL
Central Repair
2198 Southtech Drive
Greenwood, IN 46143

MXF BACKPACK BLOWER EXPLODED VIEW

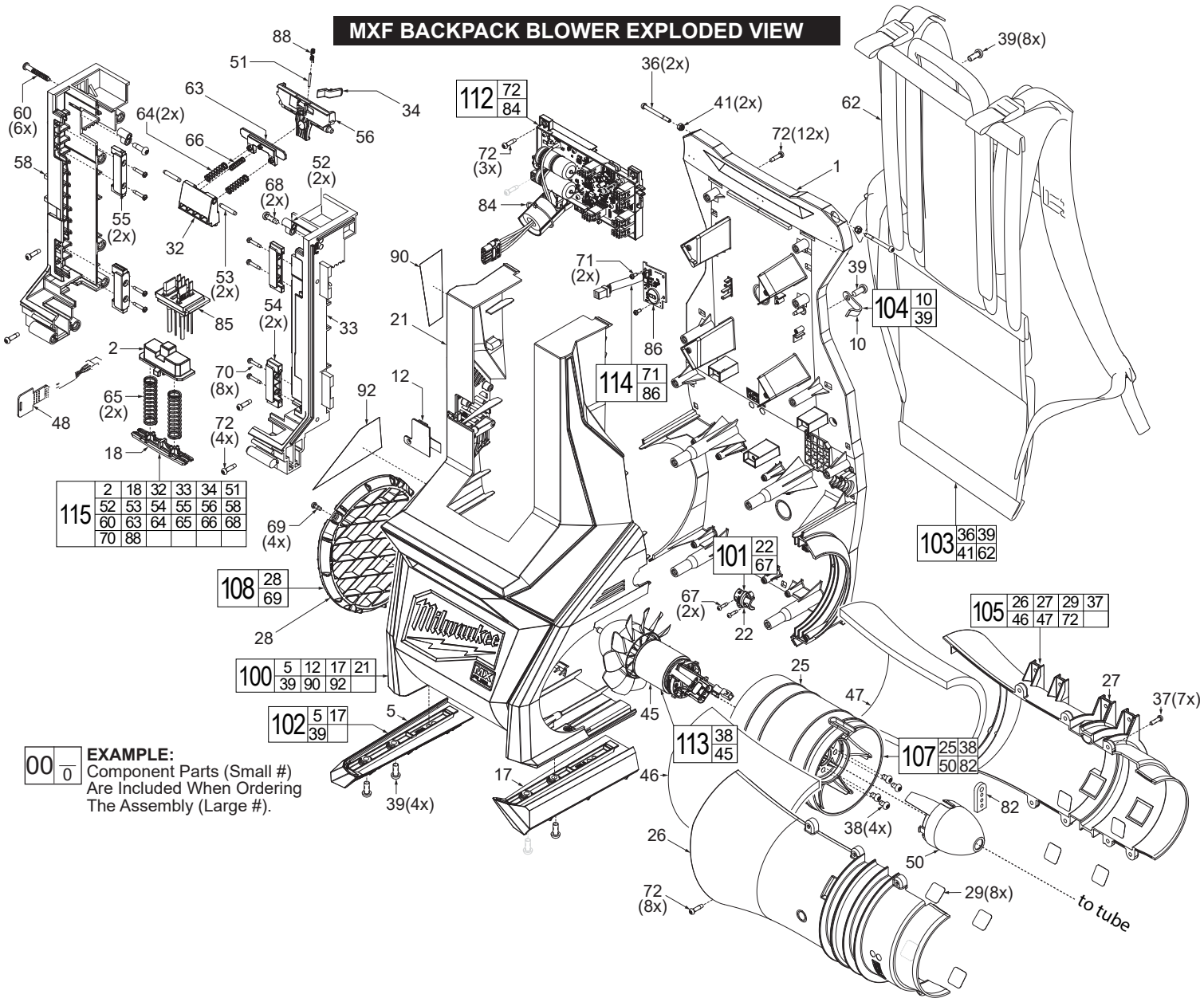

FIG.	PART NO.	DESCRIPTION OF PART	NO. REQ.
1	44-66-1102	Back Plate	(1)
2	42-42-0029	Battery Ejector	(1)
5	----------	Foot (Left)	(1)
10	----------	Nozzle Hook Clip	(1)
12	----------	Access Door	(1)
17	----------	Foot (Right)	(1)
18	44-34-0021	Ejection Spring Holder	(1)
21	----------	Front Cover	(1)
22	----------	Grommet Cover	(1)
25	----------	Inlet Duct	(1)
26	----------	Inlet Muffler Cover	(1)
27	----------	Inlet Muffler Support	(1)
28	42-52-0047	Inlet Vent	(1)
29	44-52-1001	Isolating Rubber Pad	(8)
32	----------	Latch	(1)
33	----------	Power Pack Rail (Left)	(1)
34	44-10-0021	Lever Lock Out	(1)
36	05-81-2550	M4 x 41 mm Pan Hd. T-20 Screw	(2)
37	05-81-1221	M4 x 14 mm Pan Hd. T-20 Screw	(7)
38	05-78-0029	M5 x 8 mm Machine Screw	(4)
39	05-81-0132	M6 x 14 mm Pan Hd. T-30 Screw	(13)
41	05-55-0101	Hex Nut w/Nylon Insert	(2)
45	23-30-0002	Motor	(1)
46	----------	Muffler Foam A	(1)
47	----------	Muffler Foam B	(1)
48	66-82-0002	Coin Cell Board	(1)
50	31-15-0003	Outlet Cone	(1)
51	44-60-5280	Lock Off Lever Pin	(1)
52	42-40-7080	Pivot Bushing	(2)
53	06-65-7330	Pivot Shaft	(2)
54	----------	Rail Insert	(2)
55	----------	Rear Rail Insert	(2)
56	44-10-0019	Release Lever	(1)

FIG.	PART NO.	DESCRIPTION OF PART	NO. REQ.
58	----------	Power Pack Rail (Right)	(1)
60	----------	M5 x 26.5 mm Pan Hd. T-25 Screw	(6)
62	23-94-0013	Harness Assembly	(1)
63	44-34-0022	Pivot Latch Spring Holder	(1)
64	40-50-0106	Spring	(2)
65	40-50-0109	Spring	(2)
66	40-50-8945	Spring	(1)
67	06-82-1087	M3 x 12 mm Pan Hd. T-10 ST Screw	(2)
68	06-82-0029	M5 x 16 mm Pan Hd. T-25 Screw	(2)
69	05-88-1220	M4 x 10 mm Pan Hd. T-20 Screw	(4)
70	06-82-9630	M3 Non-Return Tamperproof Screw	(8)
71	06-82-0027	M3 x 7 mm Pan Hd. T-10 Screw	(2)
72	06-82-1076	M4 x 1.41 Pan Hd. T-20 Screw	(27)
82	22-90-0001	Wire Grommet	(1)
84	----------	Main Control Board	(1)
85	----------	Battery Terminal	(1)
86	----------	BLE Board	(1)
88	40-50-0124	Lock-Off Lever Torsion Spring	(1)
90	10-22-2999	Caution Label	(1)
92	12-20-2686	Service Nameplate	(1)
100	14-46-1127	Front Cover Kit	(1)
101	14-46-1130	Grommet Cover Kit	(1)
102	14-46-1128	Feet Kit	(1)
103	14-46-1129	Harness Kit	(1)
104	14-46-1131	Nozzle Hook Kit	(1)
105	14-46-1134	Muffler Kit	(1)
107	14-46-1133	Inlet Duct Kit	(1)
108	14-46-1135	Muffler Grate Kit	(1)
112	14-20-0701	Power Control Board Kit	(1)
113	14-50-0006	Motor Kit	(1)
114	14-20-0702	BLE Board Assembly	(1)
115	14-46-1154	Battery Rail Assembly	(1)

MXF BACKPACK BLOWER EXPLODED VIEW (continued)

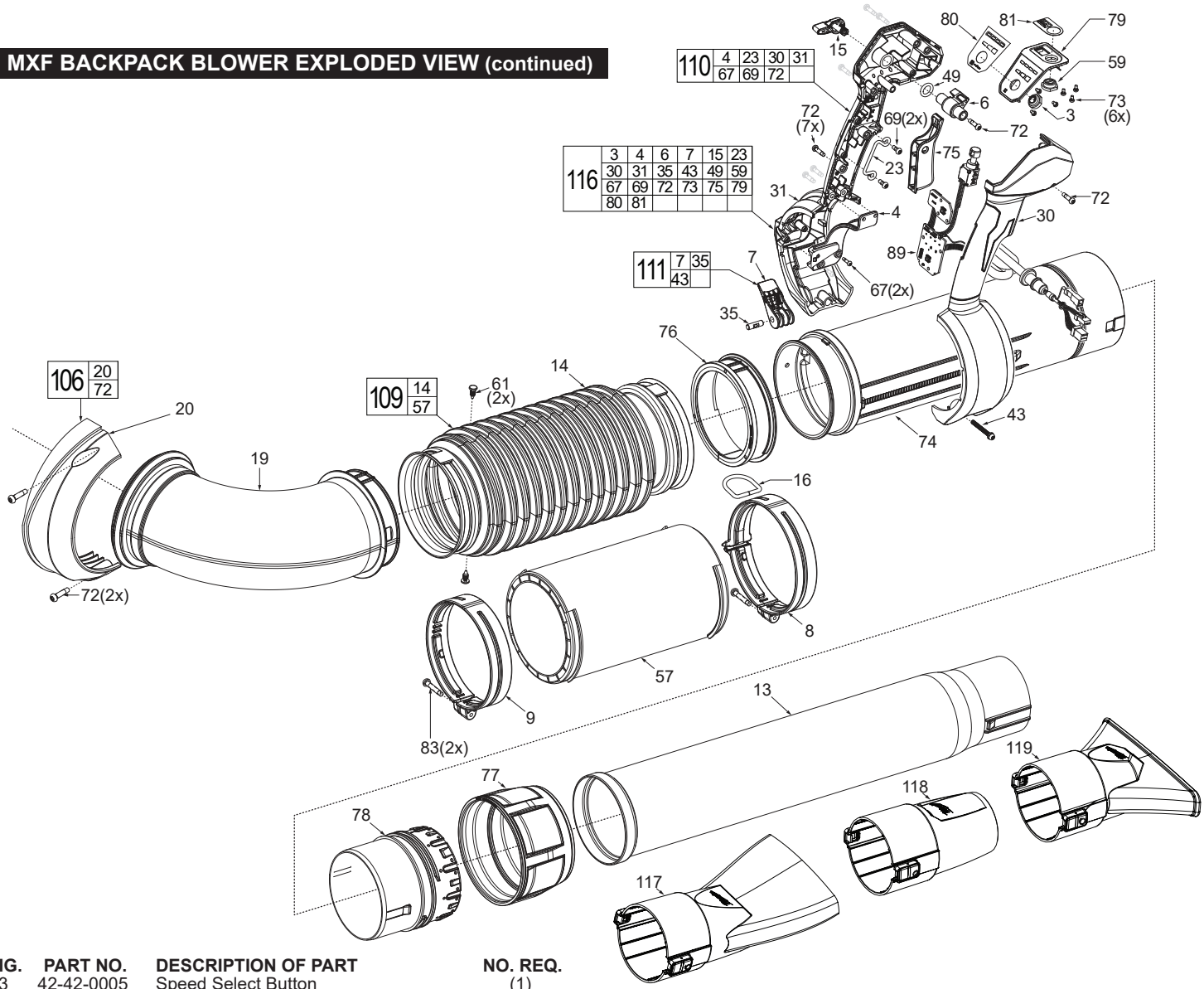

FIG.	PART NO.	DESCRIPTION OF PART	NO. REQ.
3	42-42-0005	Speed Select Button	(1)
4	42-36-0006	Power Cable Bracket	(1)
6	31-11-0001	Cam	(1)
7	31-42-0017	Handle Cam Lock	(1)
8	28-10-0104	Clamp (Large)	(1)
9	28-10-0103	Clamp (Small)	(1)
13	22-22-0024	Combined Extension Tube	(1)
14	31-01-1101	Corrugated Tube	(1)
15	23-66-0002	Cruise Control Lever	(1)
16	34-40-0233	D-Ring	(1)
19	43-33-0022	Elbow	(1)
20	----------	Elbow Cover	(1)
23	22-38-0101	Grounding Wire	(1)
30	----------	Joystick (Left)	(1)
31	----------	Joystick (Right)	(1)
35	31-10-0024	Lever Lock Pin	(1)
43	05-74-0200	M4 x 36.5 mm Screw	(1)
49	34-40-1003	O-Ring	(1)
57	----------	Retaining Ring & Foam Sub-Assembly	(1)
59	31-15-0043	Rubber Arm Button	(1)
61	44-86-0004	Plastic Retainer	(2)
67	06-82-1087	M3 x 12 mm Pan Hd. T-10 ST Screw	(2)
69	05-88-1220	M4 x 10 mm Pan Hd. T-20 Screw	(2)
72	06-82-1076	M4 x 1.41 Pan Hd. T-20 Screw	(11)
73	06-82-0153	M3 x 5 mm Pan Hd. T-10 Screw	(6)
74	22-22-0023	Throttle Control Tube	(1)
75	23-66-0003	Trigger	(1)
76	34-40-0234	Telescoping Tube Pivot Ring	(1)
77	42-90-0038	Telescoping Tube Threaded Coupler	(1)
78	42-90-0034	Telescoping Tube Threaded Handle Adapter	(1)
79	23-35-0001	UI Panel	(1)
80	10-05-1011	UI Label	(1)
81	10-05-1012	UI Label - MX Logo	(1)
83	05-81-2005	M5 x .188 Pan Hd. T-25 Screw	(2)
89	22-80-0003	UI PCB Board	(1)
106	14-46-1132	Elbow Cover Kit	(1)
109	14-46-1136	Corrugate Kit	(1)
110	14-46-1139	Joystick Shell Kit	(1)
111	14-46-1138	UI Latch Kit	(1)

FIG.	PART NO.	DESCRIPTION OF PART	NO. REQ.
116	14-46-1156	Joystick Assembly	(1)
117	49-16-2791	Angled Flare Nozzle Attachment (Accessory)	(1)
118	31-12-0121	Tapered Nozzle Attachment	(1)
119	31-12-0122	Flat Nozzle Attachment	(1)

FIG. NOTES

80,81, 90,92 A clean, dry surface is essential for proper performance for any adhesive system. The area intended for application of any adhesive label or nameplate must be prepared by cleaning with isopropyl alcohol. The solvent is to be applied with a clean, lint free applicator and the surface allowed to dry before applying any label or nameplate.

SCREW TORQUE SPECIFICATIONS

FIG.	PART NO.	WHERE USED	SEAT TORQUE (kgf-cm)	SEAT TORQUE (lb-in)
12	----------	Access Door Assy.	3±1	3±1
36	05-81-2550	Back Plate Straps	5±0.5	4±0.4
37	05-81-1221	Muffler Halves	10±1	9±1
38	05-78-0029	Motor to Stator	20±2	17±2
39	05-81-0132	Harness/Feet	30±3	26±3
43	05-74-0200	Cam Lock	3.5±0.5	3±0.4
60	05-88-0002	Battery Rail Assy.	30±1	26±1
67	06-82-1080	Grommet Cover	6±0.5	5±0.4
67	06-82-1080	Wire Cover	5±0.5	4±0.4
68	06-82-0029	Batt. Rail Pivot Bushings	23±2	20±2
69	05-88-1220	Muffler Grate	8±1	7±1
69	05-88-1220	Grnd Wire	10±1	8.5±1
70	06-82-9630	Battery Rail Inserts	7±0.5	6±0.4
71	06-82-0027	BLE Board	6±0.5	5±0.4
72	06-82-1076	Cam to Cruise Lever	8±1	7±1
72	06-82-1076	Handle Halves	10.3±1	8.9±1
72	06-82-1076	Back Plate	12.5±1	10.8±1
73	06-82-0153	UI	4±0.5	3±0.4
83	05-81-2005	Corrugate Tube Clamps	35±2.5	30±2.2

MXF BACKPACK BLOWER WIRING - BACKPLATE

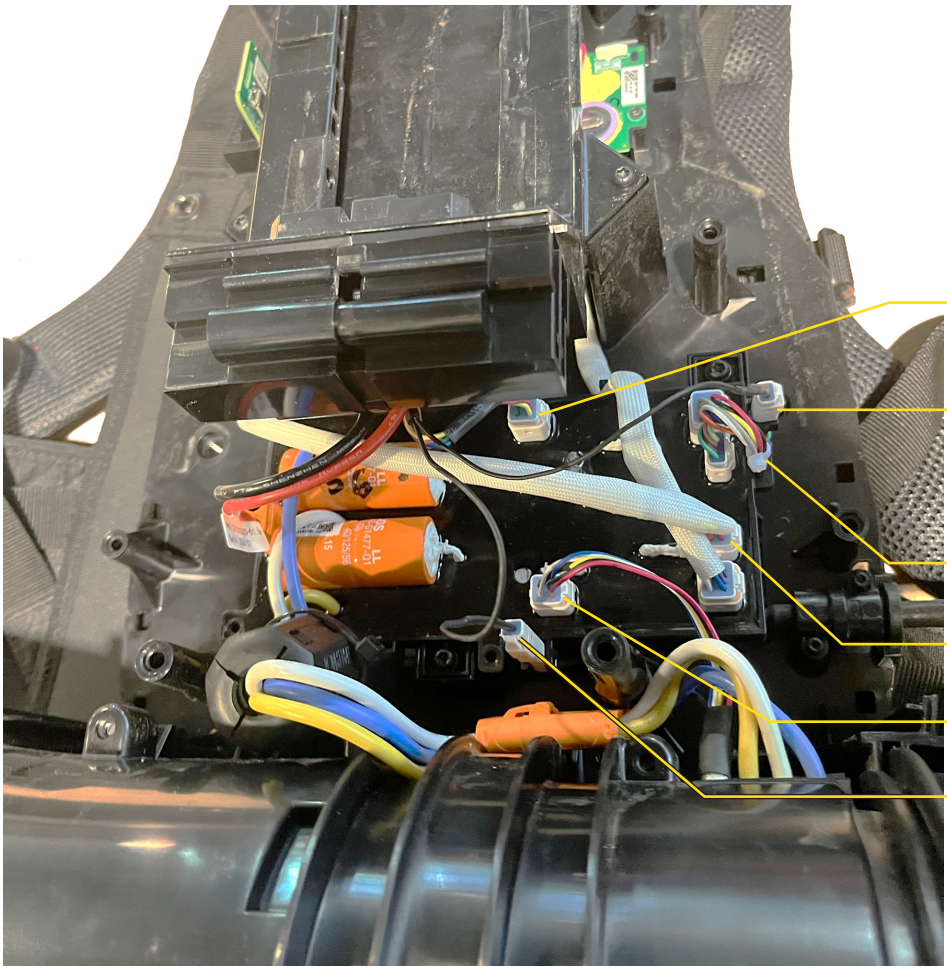

Plug Connector Assembly from Battery Rails into PCBA

Plug one of Male Ground Connectors from Battery Rails into UI Connector attached to PCBA. Be sure connector stays seated in clip.

Slide UI wires into wire trap as shown

Plug Coin Cell Board Connector into PCBA

Plug Hall Sensor Wires Connector into PCBA

Connect Female Ground Connector from Inlet Assembly to remaining Male Ground Connector from Battery Rails and Place in Connector Clip as shown

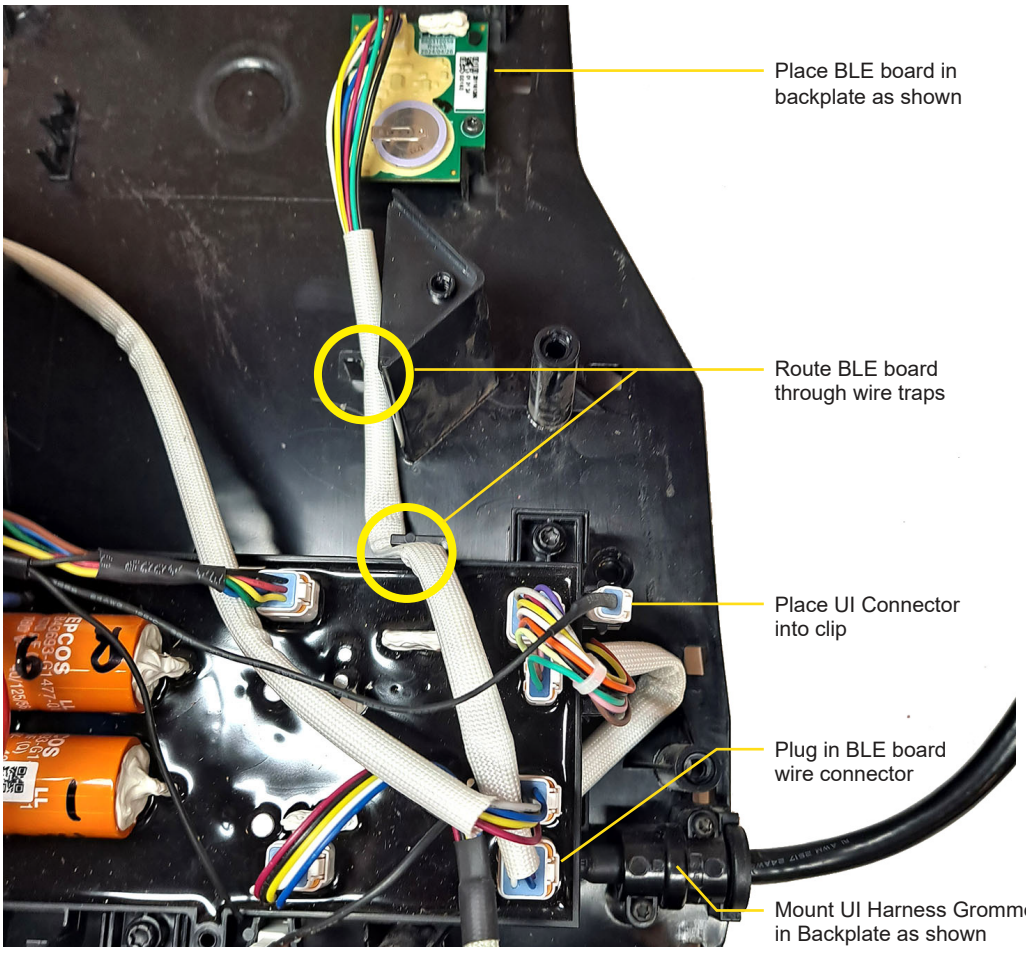

Place BLE board in backplate as shown

Route BLE board through wire traps

Place UI Connector into clip

Plug in BLE board wire connector

Mount UI Harness Grommet in Backplate as shown

MXF BACKPACK BLOWER WIRING - UI & STATOR

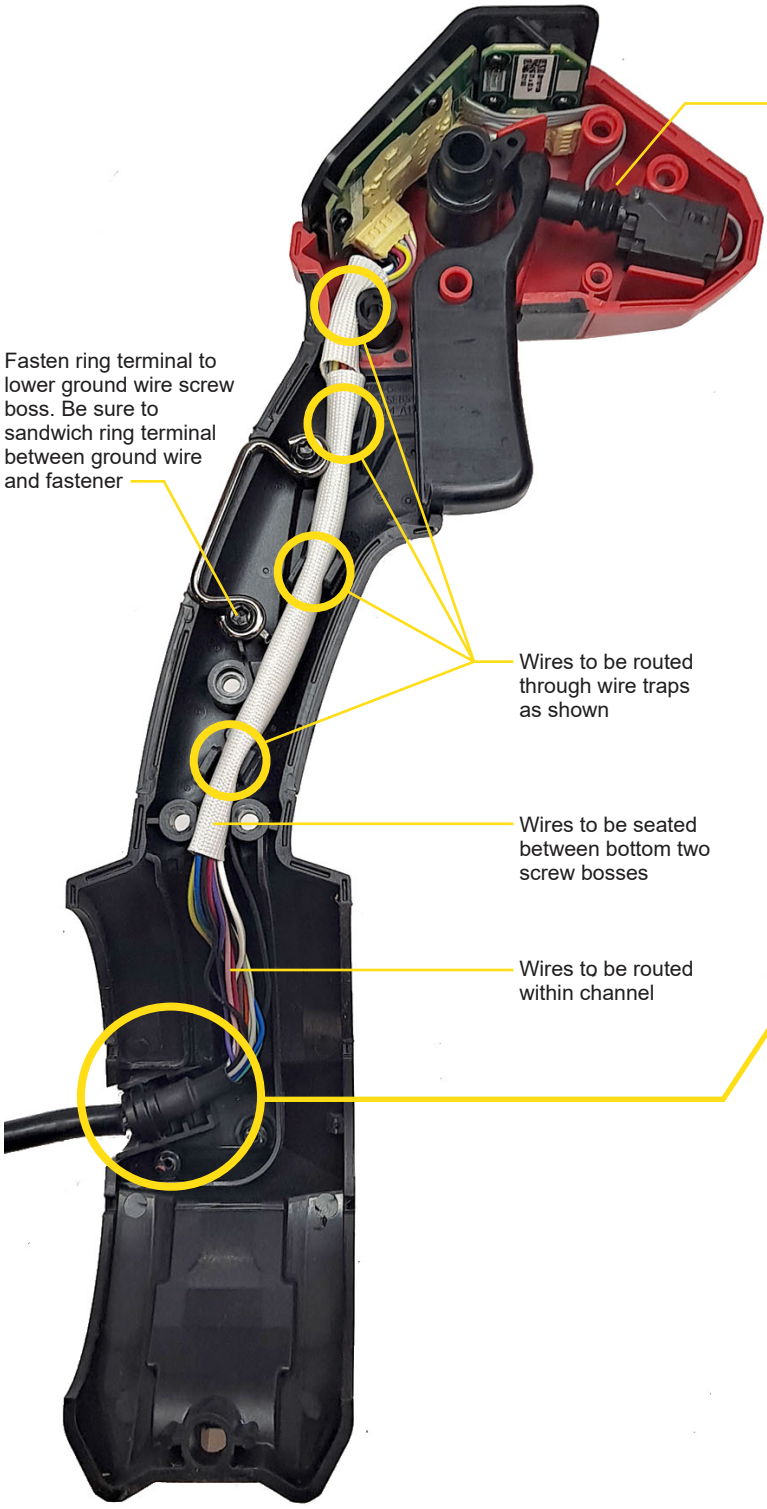

Place switch wire above handle mounts with excess wire loop between screw bosses

Fasten ring terminal to lower ground wire screw boss. Be sure to sandwich ring terminal between ground wire and fastener

Wires to be routed through wire traps as shown

Wires to be seated between bottom two screw bosses

Wires to be routed within channel



Grommet to be seated in location shown

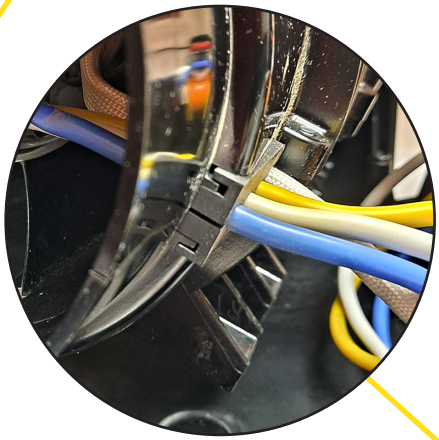

Grommet to be fully seated in stator ribs

Make sure there is 4cm of wire exposed past grommet

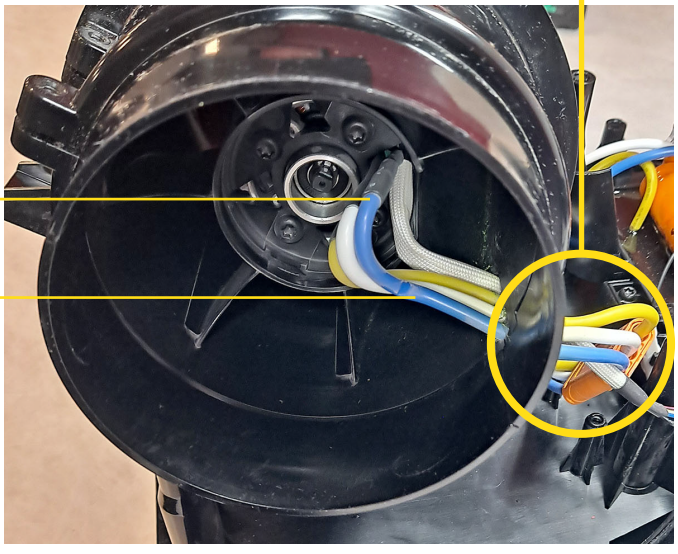

Slide motor wires through large slot in stator

Excess wire looped inside of exit cone