FLIR T560 42° + 14°

P/N: 89007-0101

Copyright

© 2023, FLIR Systems, Inc.

All rights reserved worldwide. Names and marks appearing herein are either registered trademarks or trademarks of FLIR Systems and/or its subsidiaries. All other trademarks, trade names or company names referenced herein are used for identification only and are the property of their respective owners.

Document identity

Publ. No.: 89007-0101
Commit: 94125
Language:
Modified: 2023-11-09
Formatted: 2023-11-09

Website

http://www.flir.com

Customer support

http://support.flir.com

Disclaimer

Specifications subject to change without further notice. Camera models and accessories subject to regional market considerations. License procedures may apply. Products described herein may be subject to US Export Regulations. Please refer to exportquestions@flir.com with any questions.



Imaging and optical data	
Infrared resolution	640 × 480 pixels
UltraMax (super-resolution)[1]	Yes
NETD	• <30 mK, 42° @ 30°C (86°F) • <50 mK, 14° @ 30°C (86°F)
Field of view	• 42° × 32° • 14° × 10°
Minimum focus distance	• 0.15 m (0.49 ft), 42° • 1.0 m (3.28 ft), 14°
Minimum focus distance with MSX	• 0.65 m (2.13 ft), 42° • 1.0 m (3.28 ft), 14°
Focal length	• 10 mm (0.39 in), 42° • 29 mm (1.41 in), 14°
Spatial resolution (IFOV)	• 1.20 mrad/pixel, 42° • 0.38 mrad/pixel, 14°
Available extra lenses	• 24° (AutoCal) • Dual FOV 24°/14° (service calibration required) • 6° (service calibration required) • 80° (service calibration required) • Macro lens 2.0x (service calibration required)
Lens identification	Automatic
f number	• 1.1, 42° • 1.5, 14°
Image frequency	30 Hz
Focus	• Continuous LDM • One-shot LDM • One-shot contrast • Manual

1. Not supported when using macro.

FLIR T560 42° + 14°

P/N: 89007-0101
© 2023, FLIR Systems, Inc.
#89007-0101; r. 94125;

Imaging and optical data	
Field of view match	Yes
Digital zoom	1–8× continuous

Detector data	
Focal plane array/spectral range	Uncooled microbolometer/7.5–14 µm
Detector pitch	12 µm

Image presentation	
Resolution	640 × 480 pixels (VGA)
Surface brightness (cd/m^2)	400
Screen size	4 in
Viewing angle	80°
Color depth (bits)	24
Aspect ratio	4:3
Auto-rotation	Yes
Touchscreen	Optically bonded PCAP
Display technology	IPS
Cover glass material	Dragontrail®
Programmable buttons	2
Viewfinder	No
Image adjustment	• Automatic • Automatic maximum • Automatic minimum • Manual

Image presentation modes	
Infrared image	Yes
Visual image	Yes
MSX	Yes
Picture in picture	Resizable and movable
Gallery	Yes

Measurement	
Camera temperature range	• –20 to 120°C (–4 to 248°F) • 0 to 650°C (32 to 1202°F) • 300 to 1500°C (572 to 2732°F)
Object temperature range and accuracy (for ambient temp. 15 to 35°C (59 to 95°F)	• Range –20 to 120°C (–4 to 248°F): ◦ –20 to 100°C (–4 to 212°F): ±2°C (±3.6°F) ◦ 100 to 120°C (212 to 248°F): ±2% • Range 0 to 650°C (32 to 1202°F): ◦ 0 to 100°C (32 to 212°F): ±2°C (±3.6°F) ◦ 100 to 650°C (212 to 1202°F): ±2% • Range 300 to 1500°C (572 to 2732°F): ±2%

P/N: 89007-0101
© 2023, FLIR Systems, Inc.
#89007-0101; r. 94125;

Inspection mode	
FLIR Inspection route	Enabled in the camera

Measurement analysis	
Spotmeter	3 in live mode
Area	3 in live mode
Automatic hot/cold detection	Automatic maximum/minimum markers within area
Measurement presets	• No measurements • Center spot • Hot spot • Cold spot • User preset 1 • User preset 2
Difference temperature	Yes
Reference temperature	Yes
Emissivity correction	Yes, variable from 0.01 to 1.0 or selected from materials list
Measurement corrections	Yes
External optics/windows correction	Yes

Alarm	
Color alarm (isotherm)	• Above • Below • Interval • Condensation (moisture/humidity/dewpoint) • Insulation
Measurement function alarm	Audible/visual alarms (above/below) on any selected measurement function

Set-up	
Color palettes	• Arctic • White hot • Black hot • Iron • Lava • Rainbow • Rainbow HC
Setup commands	Local adaptation of units, language, date, and time formats
Languages	21

Service functions	
Camera software update	Using USB cable or SD card

Storage of images	
Storage media	• Removable memory: SD card • FLIR Ignite Cloud services (with Wi-Fi)
Time lapse (Periodic image storage)	10 seconds to 24 hours (infrared)
Remote control operation	Using USB cable or Wi-Fi
Image file format	Standard JPEG, measurement data included. Infrared-only mode

P/N: 89007-0101
© 2023, FLIR Systems, Inc.
#89007-0101; r. 94125;

Image annotations	
Voice	60 seconds with built-in microphone and speaker (and via Bluetooth) on still images and video
Text	Text from predefined list or soft keyboard on touchscreen
Visual image annotation	Yes
Image sketch	Yes: on infrared only
Sketch	From touchscreen
METERLiNK	Wireless connection (Bluetooth) to: FLIR meters with METERLiNK
Compass	Yes
Laser distance meter information	Yes
Area measurement information	Yes
GPS	Location data automatically added to every still image and first frame in video from built-in GPS

Video recording in camera	
Radiometric infrared-video recording	RTRR (.csq)
Non-radiometric infrared-video recording	H.264 to memory card
Visual video recording	H.264 to memory card

Video streaming	
Radiometric infrared-video streaming (compressed)	Over UVC
Non-radiometric video streaming (compressed: IR, MSX, visual, Picture in Picture)	• H.264 (AVC) over RTSP (Wi-Fi) • MPEG4 over RTSP (Wi-Fi) • MJPEG over UVC and RTSP (Wi-Fi)
Visual video streaming	Yes

Digital camera	
Resolution	5 MP with LED light
Focus	Fixed
Field of view	53° × 41°
Video lamp	Built-in LED light

Laser pointer	
Laser alignment	Position is automatically displayed on the infrared image
Laser distance meter	Activated by dedicated button
Laser	Class 2, 0.05–40 m (0.16–131 ft) ±1% of measured distance

Data communication interfaces	
Interfaces	USB 2.0, Bluetooth, Wi-Fi, DisplayPort
METERLiNK/Bluetooth	Communication with headset and external sensors
Wi-Fi	Peer to peer (ad hoc) or infrastructure (network)

P/N: 89007-0101
© 2023, FLIR Systems, Inc.
#89007-0101; r. 94125;

Data communication interfaces	
Audio	Microphone and speaker for voice annotation of images
USB	USB Type-C: data transfer/video/power
USB standard	USB 2.0 High Speed
Video out	DisplayPort
Video connector type	DisplayPort over USB Type-C
Cloud services	FLIR Ignite Cloud services

Radio	
Operating frequency	Bluetooth + EDR/LE: 2402–2480 MHz WLAN 2.4 GHz: 2412–2462 MHz WLAN 5 GHz: 5150–5350 MHz (DFS: only slave mode) Note that frequency band 5150–5350 MHz is for indoor use only, see national regulations.
RF output (EIRP)	Bluetooth + EDR/LE: < 10 dBm WLAN: < 17 dBm
Antenna	Integrated PIFA antenna (gain: maximum 1.4 dBi)

Power system	
Battery type	Rechargeable Li-ion battery
Battery voltage	3.6 V
Battery operating time	> 4 hours at 25°C (77°F) with typical use
Charging system	In camera (AC adapter or 12 V from a vehicle) or two-bay charger
Charging time (using two-bay charger)	3.5 h to 90% capacity, on-screen indicator
Charging temperature	0°C to 45°C (32°F to 113°F), except for the Korean market: 10°C to 45°C (50°F to 113°F)
External power operation	AC adapter 90–260 V AC (50/60 Hz) or 12 V from a vehicle (cable with standard plug, optional)
Power management	Automatic shut-down and sleep mode
Battery documents	For documents like MSDS and UN38.3 test reports/summaries, see: https://support.flir.com/resources/msds

Environmental data	
Operating temperature range	–15 to 50°C (5–122°F)
Storage temperature range	–40 to 70°C (–40 to 158°F)
Humidity (operating and storage)	IEC 60068-2-30/24 hours, 95% relative humidity, 25–40°C (77–104°F)/2 cycles
EMC	• ETSI EN 301 489-1 (radio) • ETSI EN 301 489-17 • EN 61000-6-2 (immunity) • EN 61000-6-3 (emission) • FCC 47 CFR part 15 B, class B (emission)

P/N: 89007-0101
© 2023, FLIR Systems, Inc.
#89007-0101; r. 94125;

Environmental data	
Radio spectrum	• ETSI EN 300 328 • ETSI EN 301 893 • FCC 47 CFR part 15 C • FCC 47 CFR part 15 E
Encapsulation	IP 54 (IEC 60529)
Shock	25g (IEC 60068-2-27)
Vibration	2g (IEC 60068-2-6)
Safety	Camera: • IEC/EN 60950-1, IEC/EN 62368-1 Power supply: • IEC/EN 62368-1 • CSA/UL/KC/SAA/PSE 60950-1
Declaration of conformity	See: https://support.flir.com/resources/DoC

Physical data	
Weight (including battery)	1.4 kg (3.1 lb)
Size (L × W × H)	• Lens vertical: 140 × 201.3 × 84.1 mm (5.5 × 7.9 × 3.3 in) • Lens horisontal: 140 × 201.3 × 167.3 mm (5.5 × 7.9 × 6.6 in)
Battery weight	195 g (6.89 oz)
Battery size (L × W × H)	59 × 66 × 94 mm (2.3 × 2.6 × 3.7 in)
Tripod mounting	UNC ¼″-20
Housing material	PCABS with TPE, magnesium
Color	Black

Warranty and service	
Warranty	http://www.flir.com/warranty/

P/N: 89007-0101
© 2023, FLIR Systems, Inc.
#89007-0101; r. 94125;

Shipping information	
Packaging, type	Cardboard box
Packaging, contents	• Accessory box I: ◦ Power supply for battery charger ◦ Power supply, 15 W/3 A ◦ Printed documentation ◦ SD card (8 GB) ◦ USB 2.0 A to USB Type-C cable ◦ USB Type-C to HDMI and PD adapter ◦ USB Type-C to USB Type-C cable (USB 2.0 standard) • Accessory box II: ◦ Lens cap strap ◦ Lens cleaning cloth ◦ Neck strap • Battery (2 ea) • Battery charger • Extra lens, 14° • Hard transport case • Infrared camera with lens • Lens cap, front • Lens cap, front and rear (only for extra lenses) • License card: FLIR Thermal Studio Pro (3 month subscription) + FLIR Route Creator Plugin for Thermal Studio Pro (3 month subscription)
Packaging, weight	6.3 kg (13.9 lb)
Packaging, size	500 × 190 × 370 mm (19.7 × 7.5 × 14.6 in)
EAN-13	7332558026366
UPC-12	845188022211
Country of origin	Sweden

Supplies and accessories:

- T300238; Macro lens 2.0x with case
- T300095; IR lens, f=70 mm (6°) with case
- T300587; IR lens Dual FOV, f=17/29 mm (24°/14°) with case
- T131171ACC; Remote operation button
- T199300ACC; Battery
- T199347ACC; Hard transport case for FLIR T8xx, T5xx, and GF7x series
- T199601; Hand strap and neck strap
- T199610; Battery charger
- T300030; Option, No radio
- T911997; Tripod
- T911998; HDMI 2-port video splitter
- T300369; Mounting kit (FLIR T5xx, T8xx, Exx)
- T300768; Port adapter
- T300493ACC; Industrial protective lens window
- T850105; FLIR Inspection Route - Camera Option
- T850111; Option, Dual streaming
- T130337ACC; Calibration target
- T911630ACC; Power supply for camera, 15 W/3 A
- T911633ACC; Power supply for battery charger
- T911705ACC; USB Type-C to USB Type-C cable (USB 2.0 standard), 1.0 m
- T911706ACC; Car adapter 12 V

P/N: 89007-0101
© 2023, FLIR Systems, Inc.
#89007-0101; r. 94125;

- T911845ACC; USB Type-C to HDMI and PD adapter
- T911846ACC; USB 2.0 A to USB Type-C with Power supply
- T911940ACC; USB 2.0 A to USB Type-C cable, 1.0 m
- T300437ACC; Lens case
- T199588; IR lens, f=29 mm (14°) with case
- T199589; IR lens, f=17 mm (24°) with case
- T199590; IR lens, f=10 mm (42°) with case
- T300805; IR lens, f=5 mm (80°) with case
- T198495; Pouch
- T197771ACC; Bluetooth Headset
- T300244; FLIR Route Creator Plugin for FLIR Thermal Studio Pro, 1 Year Subscription
- T300439; FLIR Route Creator Plugin for FLIR Thermal Studio Pro, Perpetual license
- T300243; FLIR Thermal Studio Pro, 1 Year Subscription
- T300083; FLIR Thermal Studio Pro, Perpetual license
- T300341; FLIR Thermal Studio Standard, 1 Year Subscription
- T300258; FLIR Thermal Studio Standard, Perpetual license
- 4232535; FLIR Research Studio, Professional Edition - 1 Year Subscription (online activation)
- 4232556; FLIR Research Studio, Professional Edition - Perpetual License (online activation)
- 4232590; FLIR Research Studio, Professional Edition - Perpetual License (USB dongle)
- 4220499; FLIR Research Studio, Standard Edition - 1 Year Subscription (online activation)
- 4220500; FLIR Research Studio, Standard Edition - Perpetual License (online activation)
- 4220646; FLIR Research Studio, Standard Edition - Perpetual License (USB dongle)
- T198696; FLIR ResearchIR Max 4 (hardware sec. dev.)
- T199013; FLIR ResearchIR Max 4 (printed license key)
- T199043; FLIR ResearchIR Max 4 Upgrade (printed license key)
- 4232591; FLIR ResearchIR to Research Studio, Professional Edition - 1 Year License Upgrade

This document must not be communicated or copied completely or in part, without our permission. Any infringement will lead to legal proceedings. FLIR SYSTEMS AB

Camera housing

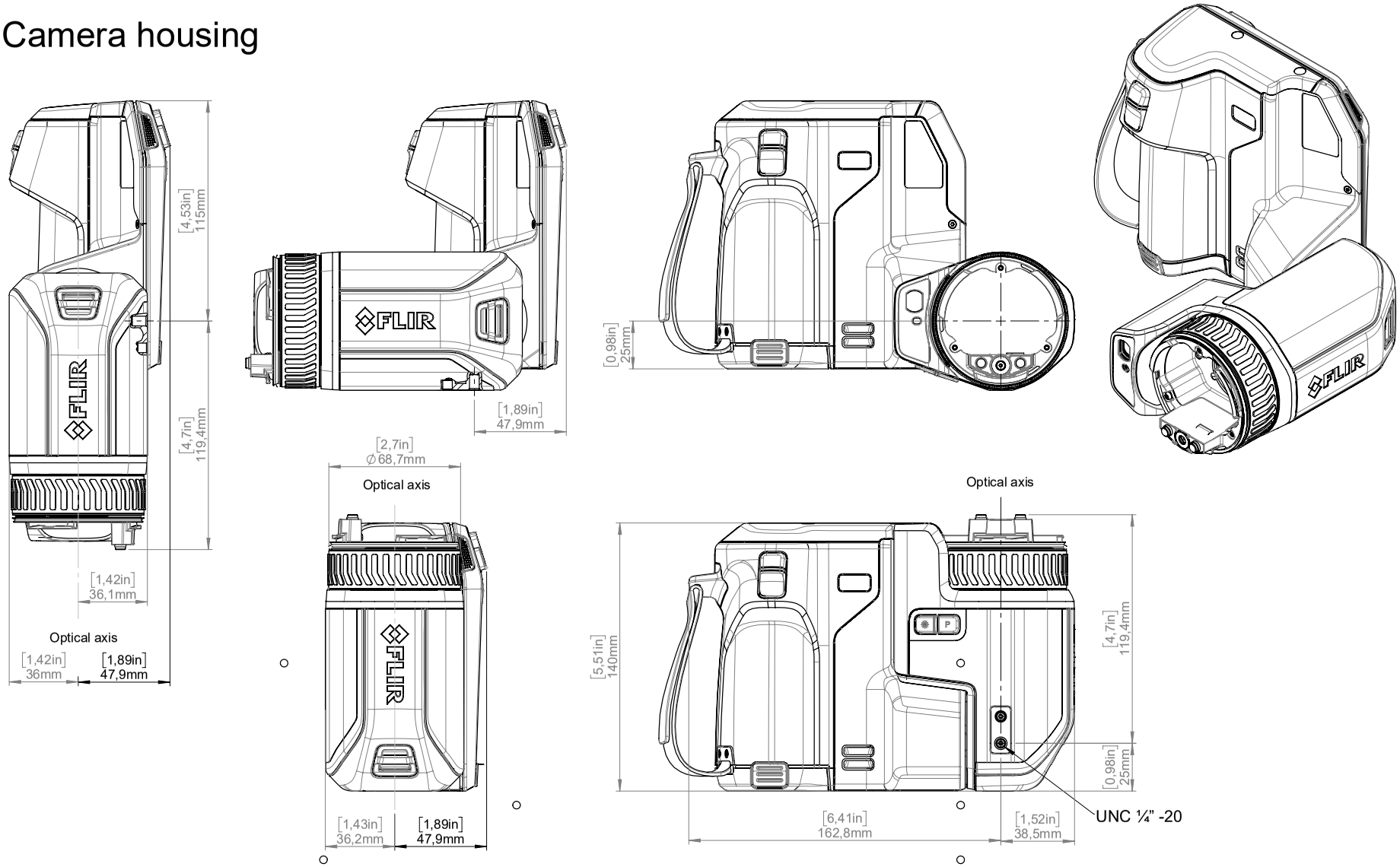

Modified by	Approved by	Modified	
A. Agardson	AKZE	2023-09-29	FLIR
This document does not contain any export-controlled information.		Size A3	
Denomination: Basic dimensions FLIR T5xx		Scale 1:2	Sheet 1(6)
		Drawing No T129991	Rev D

Denna handling får ej delges annan, kopieras i sin helhet eller delar utan vårt medgivande. Överträdelse härav beivras med stöd av gällande lag. FLIR SYSTEMS AB

This document must not be communicated or copied completely or in part, without our permission. Any infringement will lead to legal proceedings.
FLIR SYSTEMS AB

Camera with Lens IR f=10mm (42°)
Camera with Lens IR f=17mm (24°)
Camera with Lens IR f=29mm (14°)
Camera with Lens IR Close-up 2x

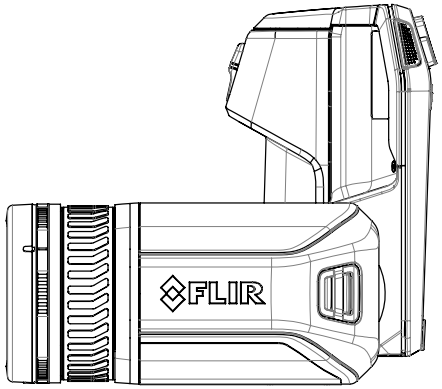

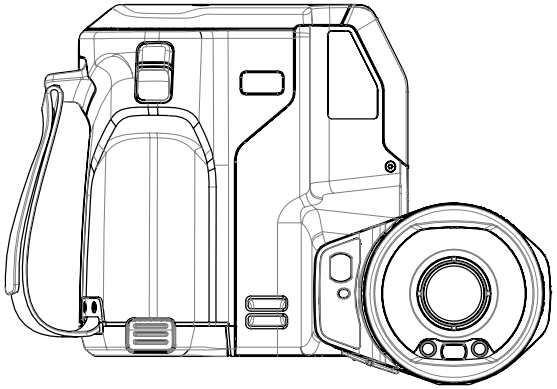

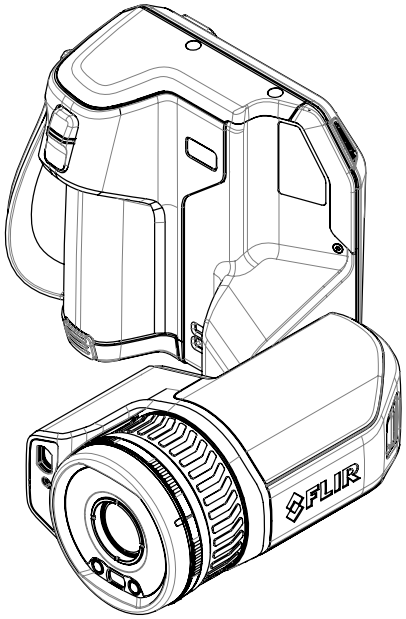

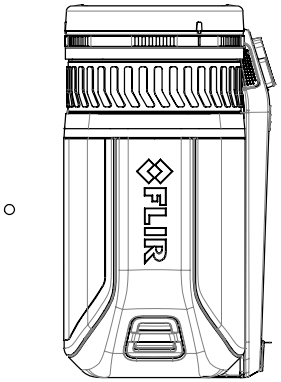

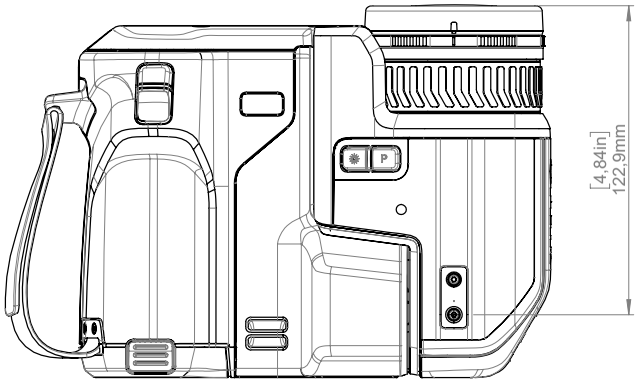

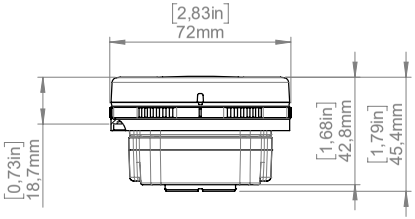

For additional dimensions see page 1

Modified by	Approved by	Modified
A. Agardson	AKZE	2023-09-29

This document does not contain any export-controlled information.

Size: A3

Denomination: Basic dimensions FLIR T5xx

Scale: 1:5

Sheet: 2(6)

Drawing No: T129991

Rev: D

Denna handling får ej delges annan, kopieras i sin helhet eller delar utan vårt medgivande. Överträdelse härav beivras med stöd av gällande lag.
FLIR SYSTEMS AB

This document must not be communicated or copied completely or in part, without our permission. Any infringement will lead to legal proceedings.
FLIR SYSTEMS AB

Camera with Lens IR f=70mm (6°)

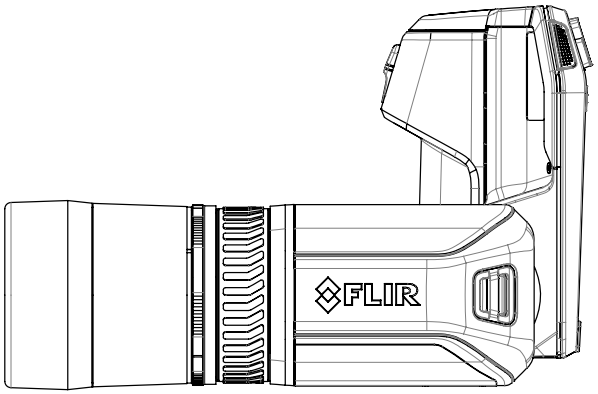

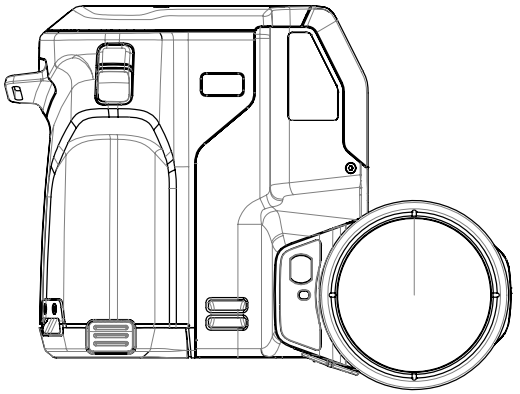

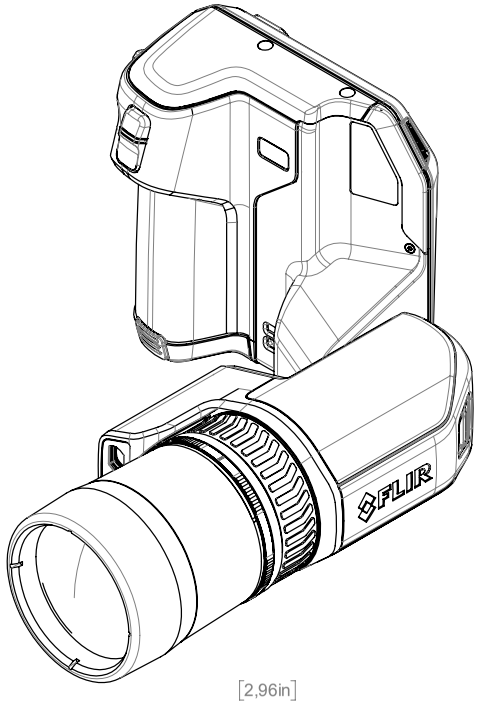

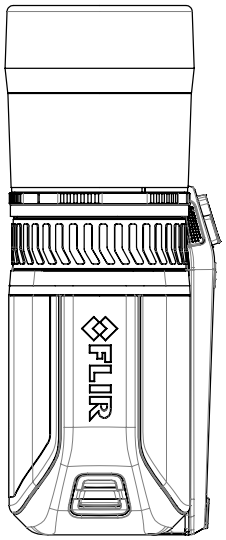

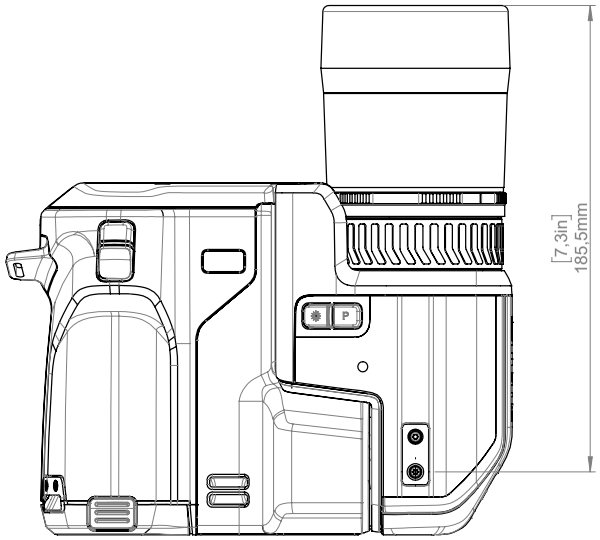

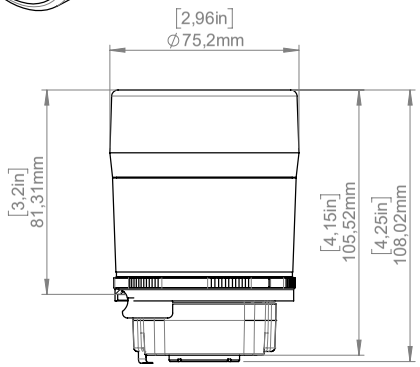

For additional dimensions see page 1

Modified by	Approved by	Modified
A. Agardson	AKZE	2023-09-29

This document does not contain any export-controlled information.

Size	Sheet
A3	3(6)

Denomination: Basic dimensions FLIR T5xx

Scale	Drawing No	Rev
1:5	T129991	D

Denna handling får ej delges annan, kopieras i sin helhet eller delar utan vårt medgivande. Överträdelse härav kan komma att beivras med stöd av gällande lag.
FLIR SYSTEMS AB

This document must not be communicated or copied completely or in part, without our permission. Any infringement will lead to legal proceedings.
FLIR SYSTEMS AB

Camera with Lens IR f=17/29mm (DFOV)

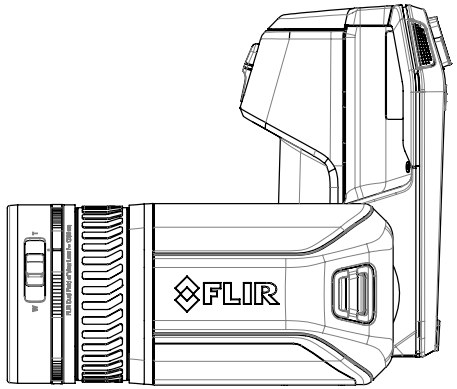

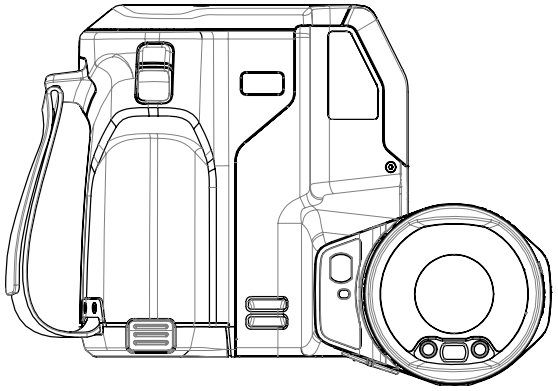

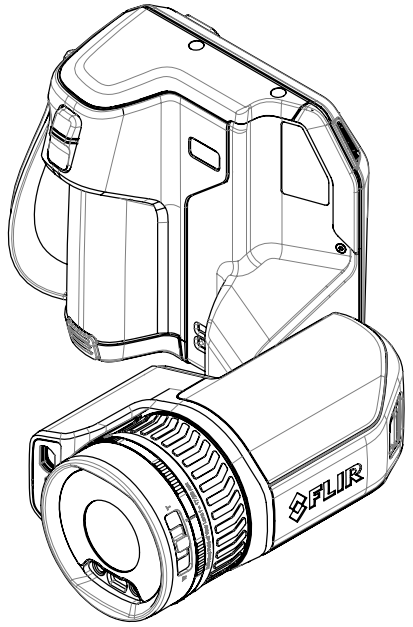

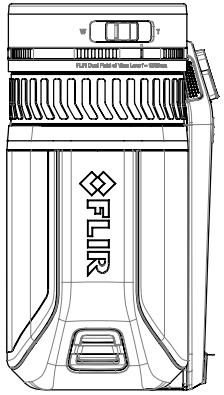

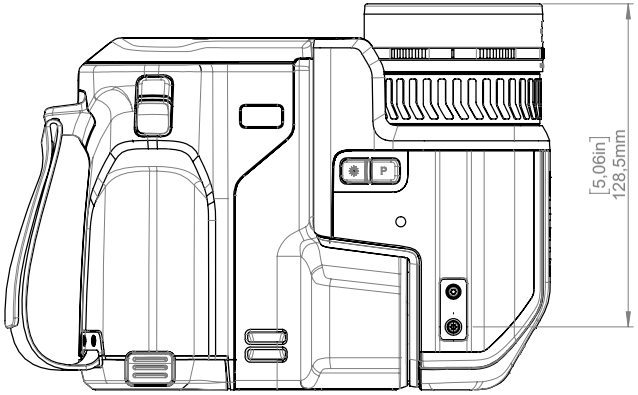

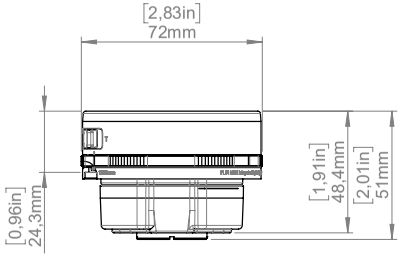

For additional dimensions see page 1

Modified by: A. Agardson	Approved by: AKZE	Modified: 2023-09-29	FLIR
This document does not contain any export-controlled information.		Size: A3	
Denomination: Basic dimensions FLIR T5xx		Scale: 1:5	Sheet: 4(6)
		Drawing No: T129991	Rev: D

Denna handling får ej delges annan, kopieras i sin helhet eller delar utan vårt medgivande. Överträdelse härav kan komma att beivras med stöd av gällande lag.
FLIR SYSTEMS AB

This document must not be communicated or copied completely or in part, without our permission. Any infringement will lead to legal proceedings.
FLIR SYSTEMS AB

Camera with Lens IR f=5mm (80°)

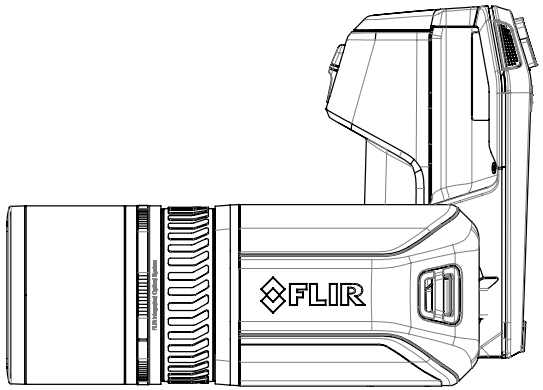

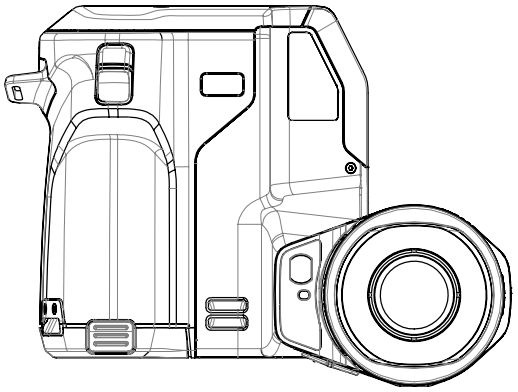

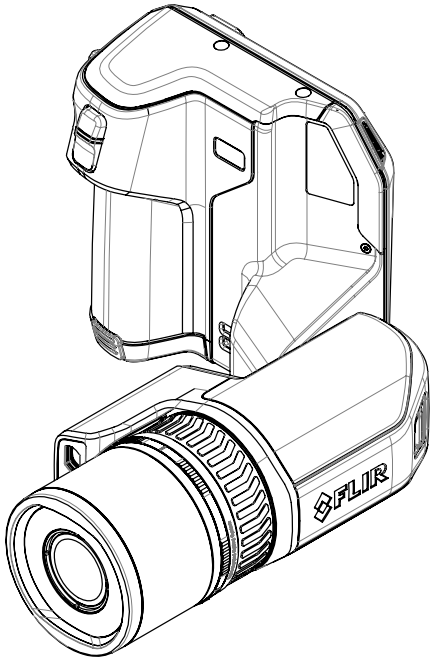

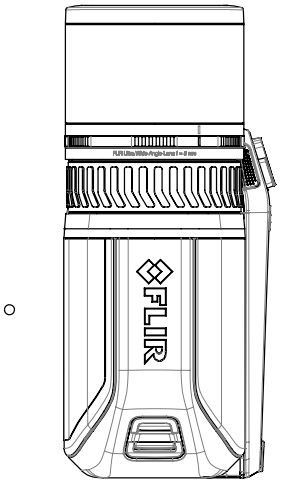

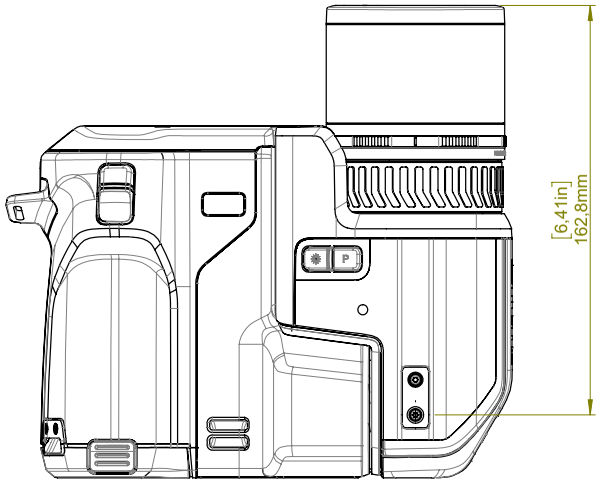

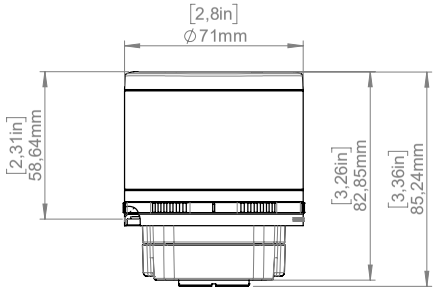

For additional dimensions see page 1

Modified by	Approved by	Modified
A. Agardson	AKZE	2023-09-29

This document does not contain any export-controlled information.

Size	Scale	Sheet
A3	1:5	5(6)

Denomination: Basic dimensions FLIR T5xx

Drawing No	Rev
T129991	D

Denna handling får ej delges annan, kopieras i sin helhet eller delar utan vårt medgivande. Överträdelse härav kan beivras med stöd av gällande lag.
FLIR SYSTEMS AB

This document must not be communicated or copied completely or in part, without our permission. Any infringement will lead to legal proceedings. FLIR SYSTEMS AB

Battery Charger

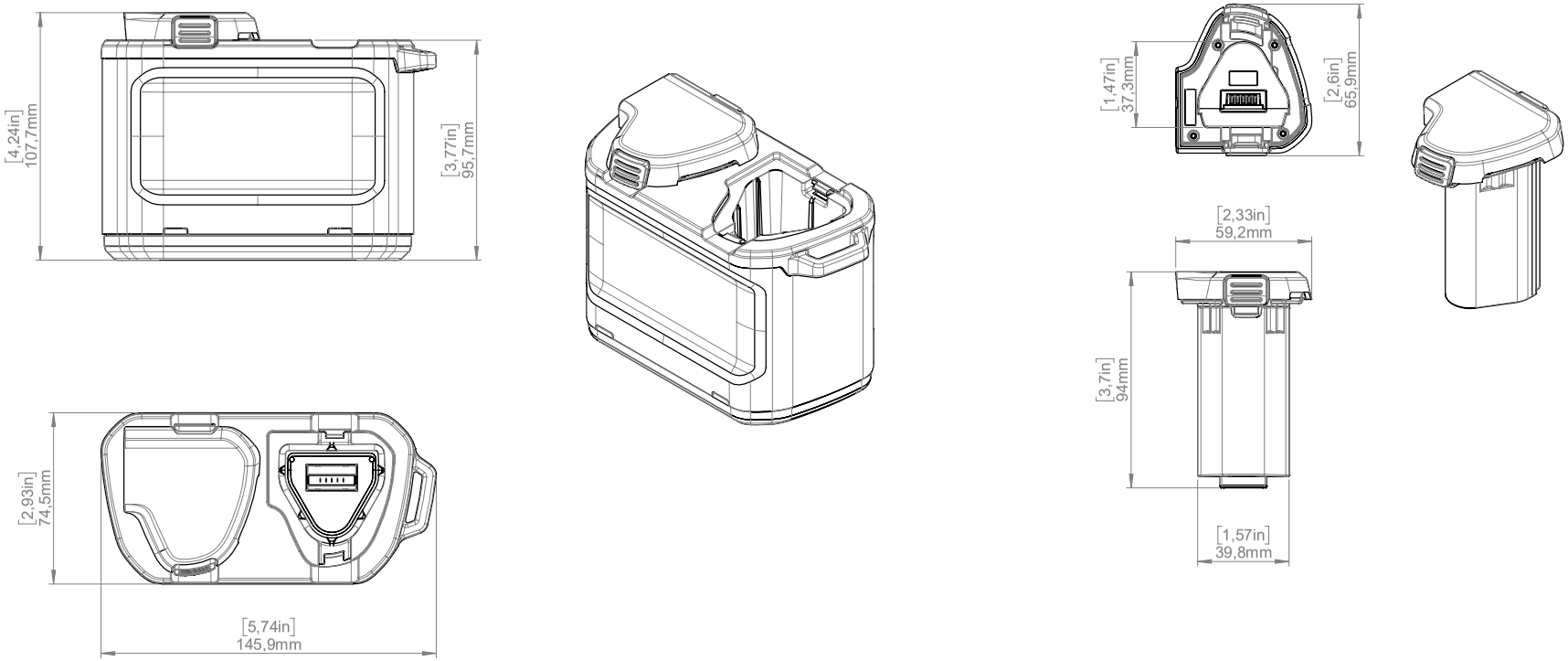

Modified by	Approved by	Modified	
A. Agardson	AKZE	2023-09-29	FLIR
This document does not contain any export-controlled information.		Size A3	
Denomination: Basic dimensions FLIR T5xx		Scale 1:5	Sheet 6(6)
		Drawing No T129991	Rev D

Denna handling får ej delges annan, kopieras i sin helhet eller delar utan vårt medgivande. Överträdelse härav beivras med stöd av gällande lag. FLIR SYSTEMS AB