# FLIR T530 24° + 42°

## P/N: 79305-0101

**Copyright**

© 2023, FLIR Systems, Inc.

All rights reserved worldwide. Names and marks appearing herein are either registered trademarks or trademarks of FLIR Systems and/or its subsidiaries. All other trademarks, trade names or company names referenced herein are used for identification only and are the property of their respective owners.

**Document identity**

Publ. No.: 79305-0101
Commit: 94105
Language:
Modified: 2023-11-09
Formatted: 2023-11-09

**Website**

http://www.flir.com

**Customer support**

http://support.flir.com

**Disclaimer**

Specifications subject to change without further notice. Camera models and accessories subject to regional market considerations. License procedures may apply. Products described herein may be subject to US Export Regulations. Please refer to exportquestions@flir.com with any questions.



| **Imaging and optical data** | |
|---|---|
| Infrared resolution | 320 × 240 pixels |
| UltraMax (super-resolution)[1] | Yes |
| NETD | • <30 mK, 42° @ 30°C (86°F)<br>• <40 mK, 24° @ 30°C (86°F) |
| Field of view | • 42° × 32°<br>• 24° × 18° |
| Minimum focus distance | • 0.15 m (0.49 ft), 42°<br>• 0.15 m (0.49 ft), 24°<br>• Macro mode 103 µm as option to 24° |
| Minimum focus distance with MSX | • 0.65 m (2.13 ft), 42°<br>• 0.5 m (1.64 ft), 24° |
| Focal length | • 10 mm (0.39 in), 42°<br>• 17 mm (0.67 in), 24° |
| Spatial resolution (IFOV) | • 2.41 mrad/pixel, 42°<br>• 1.31 mrad/pixel, 24° |
| Available extra lenses | • 14° (AutoCal)<br>• Dual FOV 24°/14° (service calibration required)<br>• 6° (service calibration required)<br>• 80° (service calibration required)<br>• Macro lens 2.0x (service calibration required) |
| Lens identification | Automatic |
| f number | • 1.1, 42°<br>• 1.3, 24° |
| Image frequency | 30 Hz |
| Focus | • Continuous LDM<br>• One-shot LDM<br>• One-shot contrast<br>• Manual |
| Field of view match | Yes |
| Digital zoom | 1–4× continuous |

1. Not supported when using macro.

# FLIR T530 24° + 42°

**P/N: 79305-0101**
© 2023, FLIR Systems, Inc.
#79305-0101; r. 94105;

| **Detector data** | |
|---|---|
| Focal plane array/spectral range | Uncooled microbolometer/7.5–14 µm |
| Detector pitch | 17 µm |

| **Image presentation** | |
|---|---|
| Resolution | 640 × 480 pixels (VGA) |
| Surface brightness (cd/m²) | 400 |
| Screen size | 4 in |
| Viewing angle | 80° |
| Color depth (bits) | 24 |
| Aspect ratio | 4:3 |
| Auto-rotation | Yes |
| Touchscreen | Optically bonded PCAP |
| Display technology | IPS |
| Cover glass material | Dragontrail® |
| Programmable buttons | 2 |
| Viewfinder | No |
| Image adjustment | • Automatic<br>• Automatic maximum<br>• Automatic minimum<br>• Manual |

| **Image presentation modes** | |
|---|---|
| Infrared image | Yes |
| Visual image | Yes |
| MSX | Yes |
| Picture in picture | Resizable and movable |
| Gallery | Yes |

| **Measurement** | |
|---|---|
| Camera temperature range | • –20 to 120°C (–4 to 248°F)<br>• 0 to 650°C (32 to 1202°F)<br>• Optional 300 to 1200°C (572 to 2192°F) |
| Object temperature range and accuracy (for ambient temp. 15 to 35°C (59 to 95°F) | • Range –20 to 120°C (–4 to 248°F):<br>◦ –20 to 100°C (–4 to 212°F): ±2°C (±3.6°F)<br>◦ 100 to 120°C (212 to 248°F): ±2%<br>• Range 0 to 650°C (32 to 1202°F):<br>◦ 0 to 100°C (32 to 212°F): ±2°C (±3.6°F)<br>◦ 100 to 650°C (212 to 1202°F): ±2%<br>• Optional Range 300 to 1200°C (572 to 2192° F): ±2% |

| **Inspection mode** | |
|---|---|
| FLIR Inspection route | Enabled in the camera |

| **Measurement analysis** | |
|---|---|
| Spotmeter | 3 in live mode |
| Area | 3 in live mode |
| Automatic hot/cold detection | Automatic maximum/minimum markers within area |

# FLIR T530 24° + 42°

**P/N: 79305-0101**
© 2023, FLIR Systems, Inc.
#79305-0101; r. 94105;

| **Measurement analysis** | |
|---|---|
| Measurement presets | • No measurements<br>• Center spot<br>• Hot spot<br>• Cold spot<br>• User preset 1<br>• User preset 2 |
| Difference temperature | Yes |
| Reference temperature | Yes |
| Emissivity correction | Yes, variable from 0.01 to 1.0 or selected from materials list |
| Measurement corrections | Yes |
| External optics/windows correction | Yes |

| **Alarm** | |
|---|---|
| Color alarm (isotherm) | • Above<br>• Below<br>• Interval<br>• Condensation (moisture/humidity/dewpoint)<br>• Insulation |
| Measurement function alarm | Audible/visual alarms (above/below) on any selected measurement function |

| **Set-up** | |
|---|---|
| Color palettes | • Arctic<br>• White hot<br>• Black hot<br>• Iron<br>• Lava<br>• Rainbow<br>• Rainbow HC |
| Setup commands | Local adaptation of units, language, date, and time formats |
| Languages | 21 |

| **Service functions** | |
|---|---|
| Camera software update | Using USB cable or SD card |

| **Storage of images** | |
|---|---|
| Storage media | • Removable memory: SD card<br>• FLIR Ignite Cloud services (with Wi-Fi) |
| Time lapse (Periodic image storage) | 10 seconds to 24 hours (infrared) |
| Remote control operation | Using USB cable or Wi-Fi |
| Image file format | Standard JPEG, measurement data included. Infrared-only mode |

| **Image annotations** | |
|---|---|
| Voice | 60 seconds with built-in microphone and speaker (and via Bluetooth) on still images and video |
| Text | Text from predefined list or soft keyboard on touchscreen |
| Visual image annotation | Yes |
| Image sketch | Yes: on infrared only |
| Sketch | From touchscreen |
| METERLiNK | Wireless connection (Bluetooth) to:<br>FLIR meters with METERLiNK |

**P/N: 79305-0101**
© 2023, FLIR Systems, Inc.
#79305-0101; r. 94105;

| **Image annotations** | |
|---|---|
| Compass | Yes |
| Area measurement information | Yes |
| GPS | Location data automatically added to every still image and first frame in video from built-in GPS |

| **Video recording in camera** | |
|---|---|
| Radiometric infrared-video recording | RTRR (.csq) |
| Non-radiometric infrared-video recording | H.264 to memory card |
| Visual video recording | H.264 to memory card |

| **Video streaming** | |
|---|---|
| Radiometric infrared-video streaming (compressed) | Over UVC |
| Non-radiometric video streaming (compressed: IR, MSX, visual, Picture in Picture) | • H.264 (AVC) over RTSP (Wi-Fi)<br>• MPEG4 over RTSP (Wi-Fi)<br>• MJPEG over UVC and RTSP (Wi-Fi) |
| Visual video streaming | Yes |

| **Digital camera** | |
|---|---|
| Resolution | 5 MP with LED light |
| Focus | Fixed |
| Field of view | 53° × 41° |
| Video lamp | Built-in LED light |

| **Laser pointer** | |
|---|---|
| Laser alignment | Position is automatically displayed on the infrared image |
| Laser distance meter | Activated by dedicated button |
| Laser | Class 2, 0.05–40 m (0.16–131 ft) ±1% of measured distance |

| **Data communication interfaces** | |
|---|---|
| Interfaces | USB 2.0, Bluetooth, Wi-Fi, DisplayPort |
| METERLiNK/Bluetooth | Communication with headset and external sensors |
| Wi-Fi | Peer to peer (ad hoc) or infrastructure (network) |
| Audio | Microphone and speaker for voice annotation of images |
| USB | USB Type-C: data transfer/video/power |
| USB standard | USB 2.0 High Speed |
| Video out | DisplayPort |
| Video connector type | DisplayPort over USB Type-C |
| Cloud services | FLIR Ignite Cloud services |

**P/N: 79305-0101**
© 2023, FLIR Systems, Inc.
#79305-0101; r. 94105;

| **Radio** | |
|---|---|
| Operating frequency | Bluetooth + EDR/LE: 2402–2480 MHz<br>WLAN 2.4 GHz: 2412–2462 MHz<br>WLAN 5 GHz: 5150–5350 MHz (DFS: only slave mode)<br>Note that frequency band 5150–5350 MHz is for indoor use only, see national regulations. |
| RF output (EIRP) | Bluetooth + EDR/LE: < 10 dBm<br>WLAN: < 17 dBm |
| Antenna | Integrated PIFA antenna (gain: maximum 1.4 dBi) |

| **Power system** | |
|---|---|
| Battery type | Rechargeable Li-ion battery |
| Battery voltage | 3.6 V |
| Battery operating time | > 4 hours at 25°C (77°F) with typical use |
| Charging system | In camera (AC adapter or 12 V from a vehicle) or two-bay charger |
| Charging time (using two-bay charger) | 3.5 h to 90% capacity, on-screen indicator |
| Charging temperature | 0°C to 45°C (32°F to 113°F), except for the Korean market: 10°C to 45°C (50°F to 113°F) |
| External power operation | AC adapter 90–260 V AC (50/60 Hz) or 12 V from a vehicle (cable with standard plug, optional) |
| Power management | Automatic shut-down and sleep mode |
| Battery documents | For documents like MSDS and UN38.3 test reports/summaries, see: https://support.flir.com/resources/msds |

| **Environmental data** | |
|---|---|
| Operating temperature range | –15 to 50°C (5–122°F) |
| Storage temperature range | –40 to 70°C (–40 to 158°F) |
| Humidity (operating and storage) | IEC 60068-2-30/24 hours, 95% relative humidity, 25–40°C (77–104°F)/2 cycles |
| EMC | • ETSI EN 301 489-1 (radio)<br>• ETSI EN 301 489-17<br>• EN 61000-6-2 (immunity)<br>• EN 61000-6-3 (emission)<br>• FCC 47 CFR part 15 B, class B (emission) |
| Radio spectrum | • ETSI EN 300 328<br>• ETSI EN 301 893<br>• FCC 47 CFR part 15 C<br>• FCC 47 CFR part 15 E |
| Encapsulation | IP 54 (IEC 60529) |
| Shock | 25g (IEC 60068-2-27) |
| Vibration | 2g (IEC 60068-2-6) |
| Safety | Camera:<br>• IEC/EN 60950-1, IEC/EN 62368-1<br>Power supply:<br>• IEC/EN 62368-1<br>• CSA/UL/KC/SAA/PSE 60950-1 |
| Declaration of conformity | See: https://support.flir.com/resources/DoC |

# FLIR T530 24° + 42°

**P/N: 79305-0101**
© 2023, FLIR Systems, Inc.
#79305-0101; r. 94105;

| **Physical data** | |
|---|---|
| Weight (including battery) | 1.3 kg (2.9 lb) |
| Size (L × W × H) | • Lens vertical: 140 × 201.3 × 84.1 mm (5.5 × 7.9 × 3.3 in)<br>• Lens horisontal: 140 × 201.3 × 167.3 mm (5.5 × 7.9 × 6.6 in) |
| Battery weight | 195 g (6.89 oz) |
| Battery size (L × W × H) | 59 × 66 × 94 mm (2.3 × 2.6 × 3.7 in) |
| Tripod mounting | UNC ¼″-20 |
| Housing material | PCABS with TPE, magnesium |
| Color | Black |

| **Warranty and service** | |
|---|---|
| Warranty | http://www.flir.com/warranty/ |

| **Shipping information** | |
|---|---|
| Packaging, type | Cardboard box |
| Packaging, contents | • Accessory box I:<br>◦ Power supply for battery charger<br>◦ Power supply, 15 W/3 A<br>◦ Printed documentation<br>◦ SD card (8 GB)<br>◦ USB 2.0 A to USB Type-C cable<br>◦ USB Type-C to HDMI and PD adapter<br>◦ USB Type-C to USB Type-C cable (USB 2.0 standard)<br>• Accessory box II:<br>◦ Lens cap strap<br>◦ Lens cleaning cloth<br>◦ Neck strap<br>• Battery (2 ea)<br>• Battery charger<br>• Extra lens, 42°<br>• Hard transport case<br>• Infrared camera with lens<br>• Lens cap, front<br>• Lens cap, front and rear (only for extra lenses)<br>• License card: FLIR Thermal Studio Pro (3 month subscription) + FLIR Route Creator Plugin for Thermal Studio Pro (3 month subscription) |
| Packaging, weight | 6.2 kg (13.7 lb) |
| Packaging, size | 500 × 190 × 370 mm (19.7 × 7.5 × 14.6 in) |
| EAN-13 | 7332558012956 |
| UPC-12 | 845188014643 |
| Country of origin | Sweden |

**Supplies and accessories:**

- T300238; Macro lens 2.0x with case
- T300095; IR lens, f=70 mm (6°) with case
- T300587; IR lens Dual FOV, f=17/29 mm (24°/14°) with case
- T131171ACC; Remote operation button
- T199300ACC; Battery
- T199347ACC; Hard transport case for FLIR T8xx, T5xx, and GF7x series
- T199601; Hand strap and neck strap
- T199610; Battery charger

**P/N: 79305-0101**
© 2023, FLIR Systems, Inc.
#79305-0101; r. 94105;

- T199616; Option, High temperature, +300 to +1200°C
- T300030; Option, No radio
- T911997; Tripod
- T911998; HDMI 2-port video splitter
- T300369; Mounting kit (FLIR T5xx, T8xx, Exx)
- T300768; Port adapter
- T300493ACC; Industrial protective lens window
- T850105; FLIR Inspection Route - Camera Option
- T850111; Option, Dual streaming
- T199609; Option, Macro mode 50/71/101 µm for 24°
- T130337ACC; Calibration target
- T911630ACC; Power supply for camera, 15 W/3 A
- T911633ACC; Power supply for battery charger
- T911705ACC; USB Type-C to USB Type-C cable (USB 2.0 standard), 1.0 m
- T911706ACC; Car adapter 12 V
- T911845ACC; USB Type-C to HDMI and PD adapter
- T911846ACC; USB 2.0 A to USB Type-C with Power supply
- T911940ACC; USB 2.0 A to USB Type-C cable, 1.0 m
- T300437ACC; Lens case
- T199588; IR lens, f=29 mm (14°) with case
- T199589; IR lens, f=17 mm (24°) with case
- T199590; IR lens, f=10 mm (42°) with case
- T300805; IR lens, f=5 mm (80°) with case
- T198495; Pouch
- T197771ACC; Bluetooth Headset
- T300244; FLIR Route Creator Plugin for FLIR Thermal Studio Pro, 1 Year Subscription
- T300439; FLIR Route Creator Plugin for FLIR Thermal Studio Pro, Perpetual license
- T300243; FLIR Thermal Studio Pro, 1 Year Subscription
- T300083; FLIR Thermal Studio Pro, Perpetual license
- T300341; FLIR Thermal Studio Standard, 1 Year Subscription
- T300258; FLIR Thermal Studio Standard, Perpetual license
- 4232535; FLIR Research Studio, Professional Edition - 1 Year Subscription (online activation)
- 4232556; FLIR Research Studio, Professional Edition - Perpetual License (online activation)
- 4232590; FLIR Research Studio, Professional Edition - Perpetual License (USB dongle)
- 4220499; FLIR Research Studio, Standard Edition - 1 Year Subscription (online activation)
- 4220500; FLIR Research Studio, Standard Edition - Perpetual License (online activation)
- 4220646; FLIR Research Studio, Standard Edition - Perpetual License (USB dongle)
- T198696; FLIR ResearchIR Max 4 (hardware sec. dev.)
- T199013; FLIR ResearchIR Max 4 (printed license key)
- T199043; FLIR ResearchIR Max 4 Upgrade (printed license key)
- 4232591; FLIR ResearchIR to Research Studio, Professional Edition - 1 Year License Upgrade

This document must not be communicated or copied completely or in part, without our permission. Any infringement will lead to legal proceedings.
FLIR SYSTEMS AB

# Camera housing

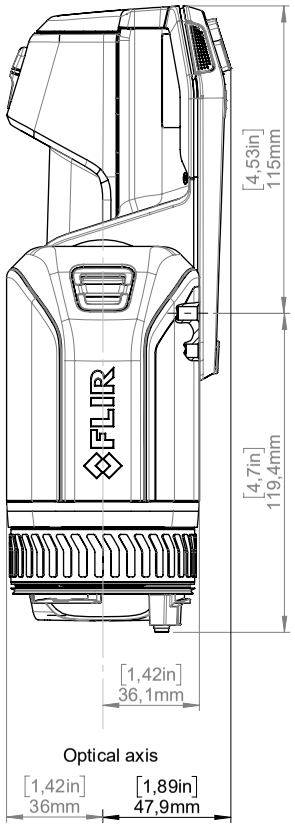


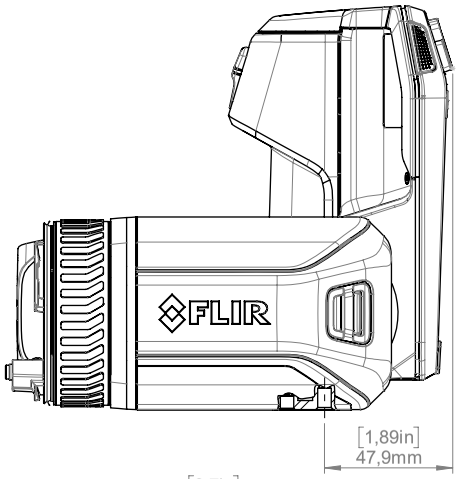


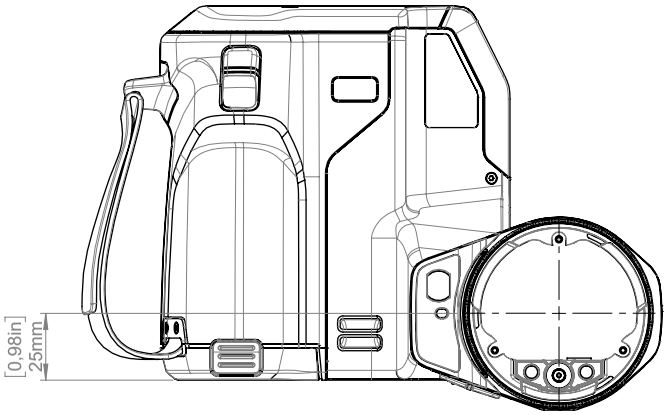


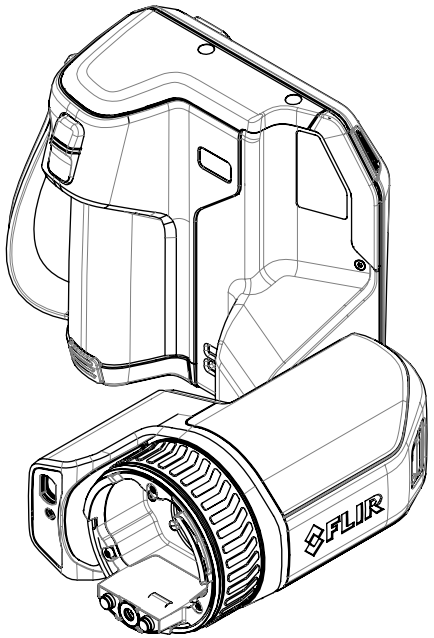

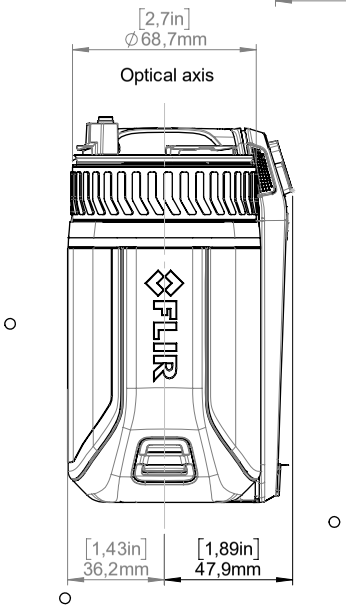


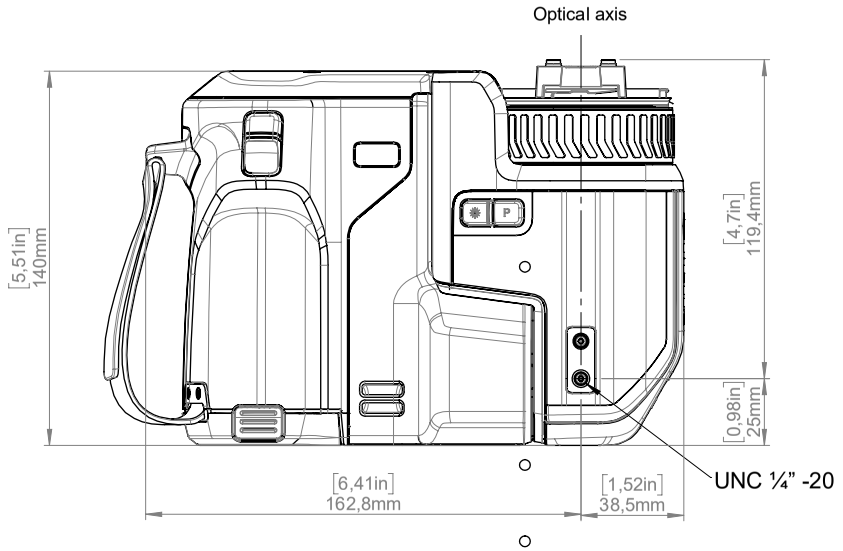


| | | | |
|---|---|---|---|
| Modified by: A. Agardson | Approved by: AKZE | Modified: 2023-09-29 | FLIR |
| This document does not contain any export-controlled information. | | Size: A3 | |
| Denomination: Basic dimensions FLIR T5xx | | Scale: 1:2 | Sheet: 1(6) |
| | | Drawing No: T129991 | Rev: D |

Denna handling får ej delges annan, kopieras i sin helhet eller delar utan vårt medgivande. Överträdelse härav beivras med stöd av gällande lag.
FLIR SYSTEMS AB

This document must not be communicated or copied completely or in part, without our permission. Any infringement will lead to legal proceedings.
FLIR SYSTEMS AB

# Camera with Lens IR f=10mm (42°)
# Camera with Lens IR f=17mm (24°)
# Camera with Lens IR f=29mm (14°)
# Camera with Lens IR Close-up 2x

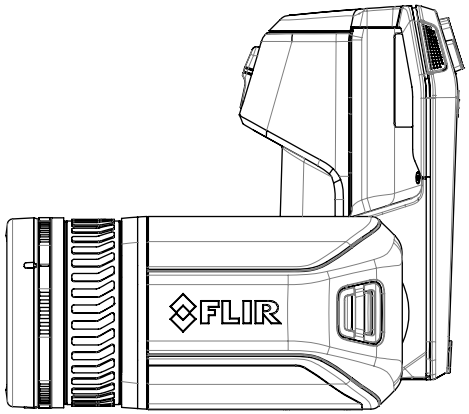


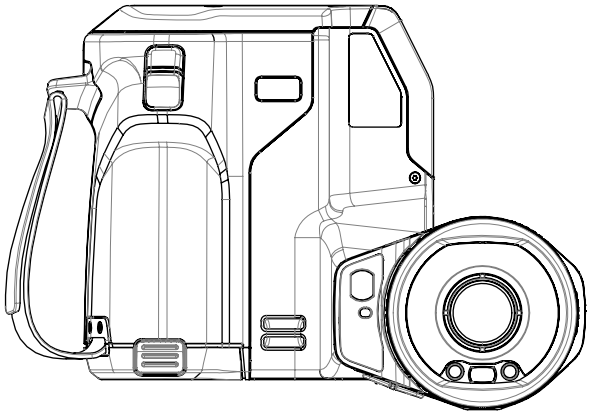

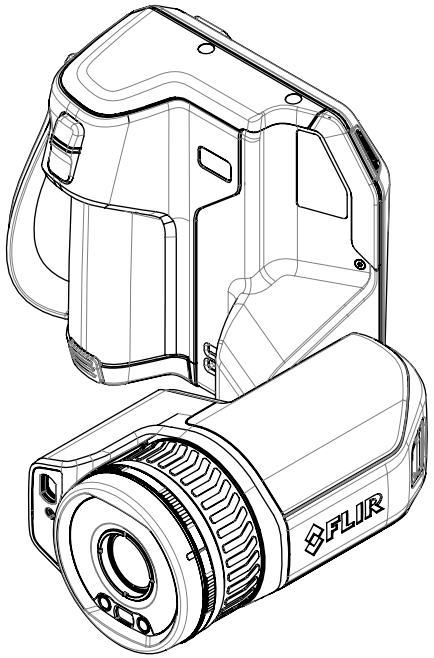


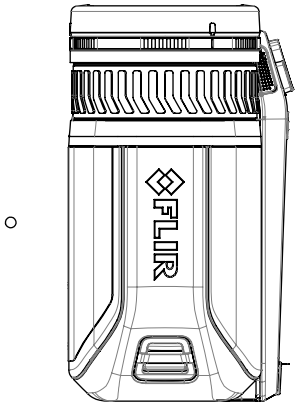


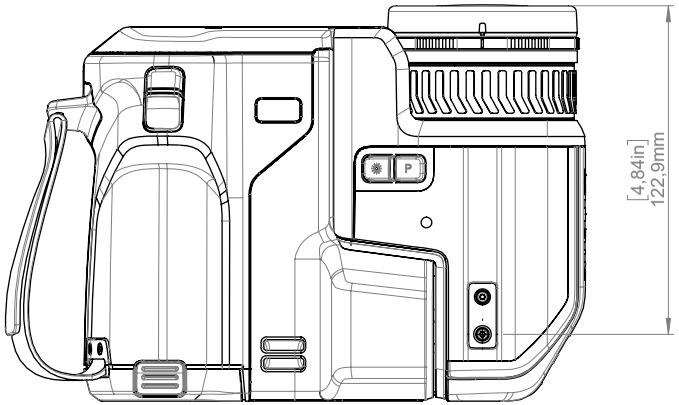


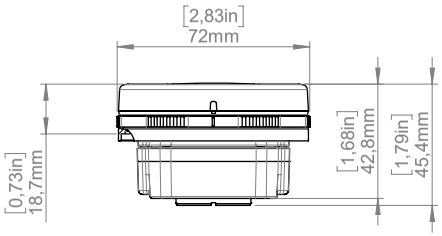


For additional dimensions see page 1

| | | | |
|---|---|---|---|
| Modified by: A. Agardson | Approved by: AKZE | Modified: 2023-09-29 | FLIR |
| This document does not contain any export-controlled information. | | Size: A3 | |
| Denomination: Basic dimensions FLIR T5xx | | Scale: 1:5 | Sheet: 2(6) |
| | | Drawing No: T129991 | Rev: D |

Denna handling får ej delges annan, kopieras i sin helhet eller delar utan vårt medgivande. Överträdelse härav beivras med stöd av gällande lag.
FLIR SYSTEMS AB

This document must not be communicated or copied completely or in part, without our permission. Any infringement will lead to legal proceedings.
FLIR SYSTEMS AB

# Camera with Lens IR f=70mm (6°)

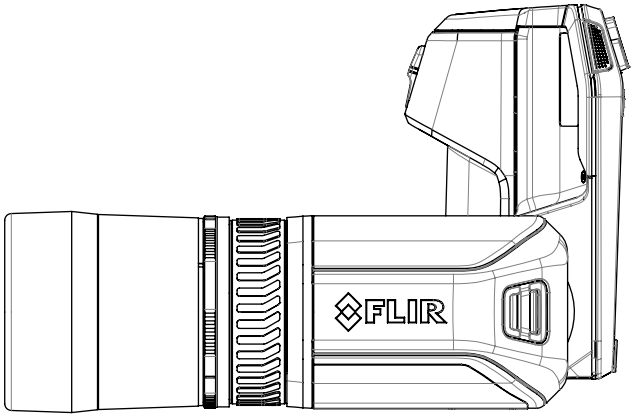


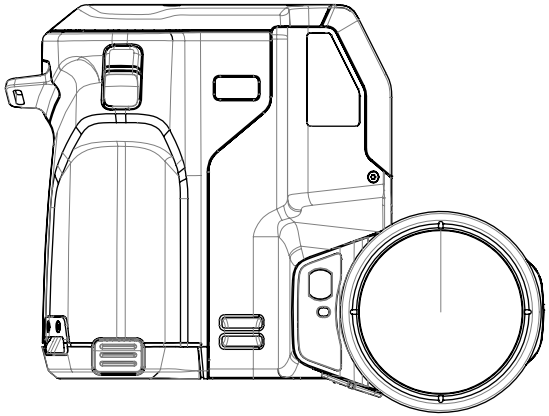

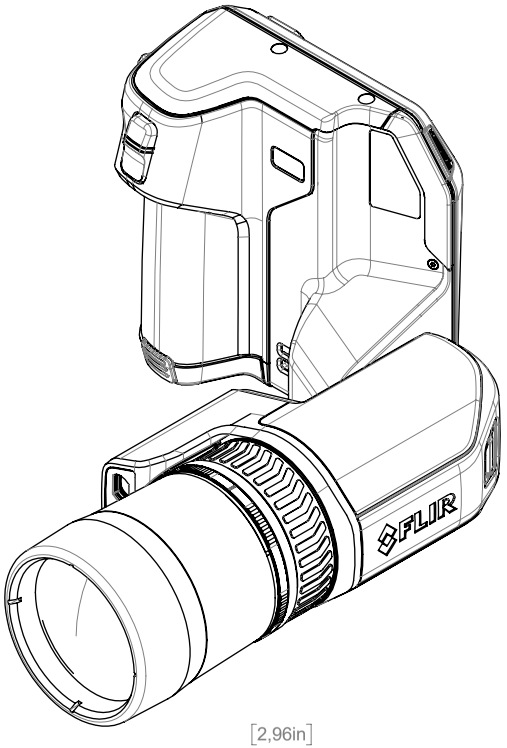


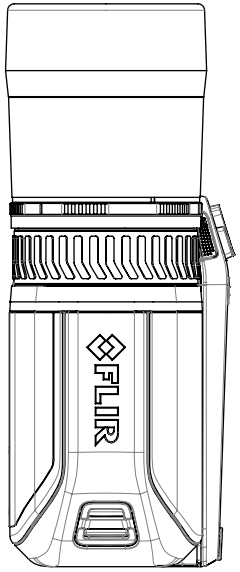


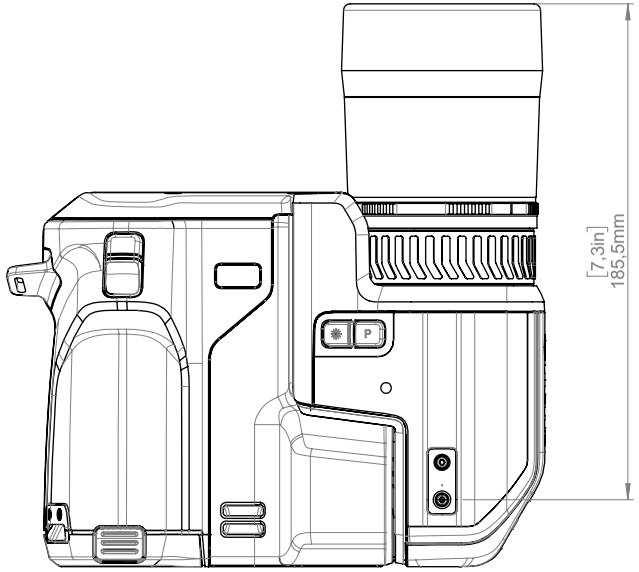


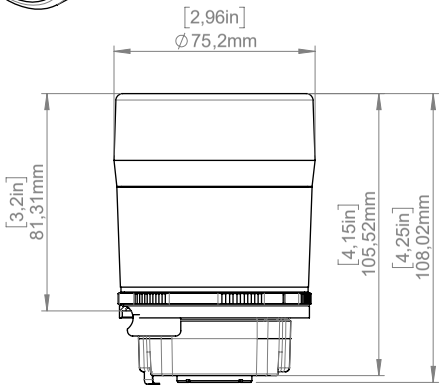


For additional dimensions see page 1

| | | | |
|---|---|---|---|
| Modified by: A. Agardson | Approved by: AKZE | Modified: 2023-09-29 | FLIR |
| This document does not contain any export-controlled information. | | Size: A3 | |
| Denomination: Basic dimensions FLIR T5xx | | Scale: 1:5 | Sheet: 3(6) |
| | | Drawing No: T129991 | Rev: D |

Denna handling får ej delges annan, kopieras i sin helhet eller delar utan vårt medgivande. Överträdelse härav beivras med stöd av gällande lag.
FLIR SYSTEMS AB

This document must not be communicated or copied completely or in part, without our permission. Any infringement will lead to legal proceedings.
FLIR SYSTEMS AB

# Camera with Lens IR f=17/29mm (DFOV)

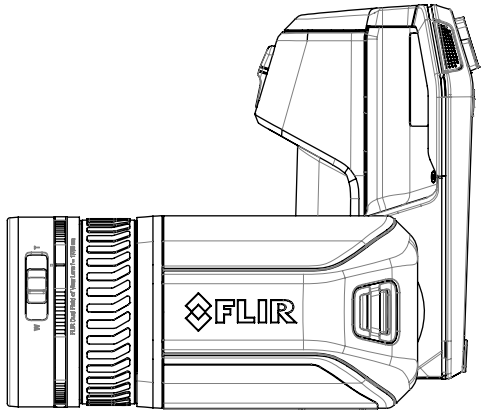


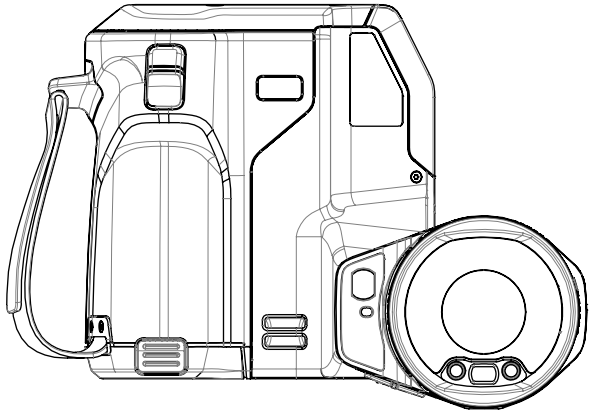

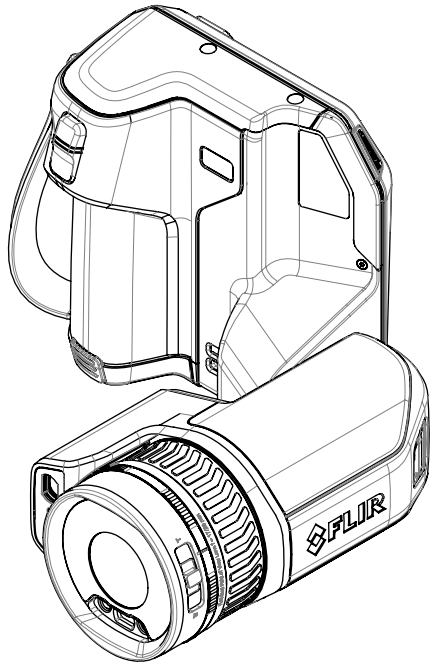


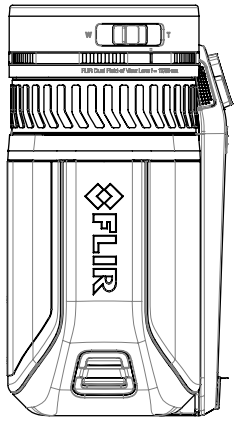


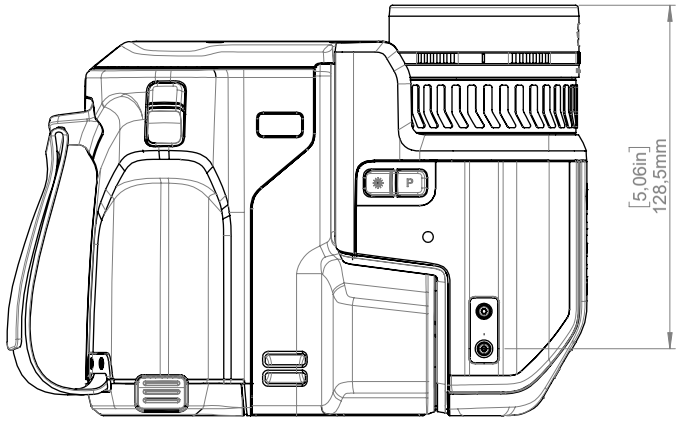


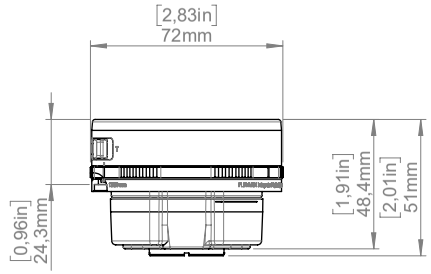


For additional dimensions see page 1

| | | | |
|---|---|---|---|
| Modified by: A. Agardson | Approved by: AKZE | Modified: 2023-09-29 | FLIR |
| This document does not contain any export-controlled information. | | Size: A3 | |
| Denomination: Basic dimensions FLIR T5xx | | Scale: 1:5 | Sheet: 4(6) |
| | | Drawing No: T129991 | Rev: D |

Denna handling får ej delges annan, kopieras i sin helhet eller delar, utan vårt medgivande. Överträdelse härav beivras med stöd av gällande lag.
FLIR SYSTEMS AB

This document must not be communicated or copied completely or in part, without our permission. Any infringement will lead to legal proceedings.
FLIR SYSTEMS AB

# Camera with Lens IR f=5mm (80°)

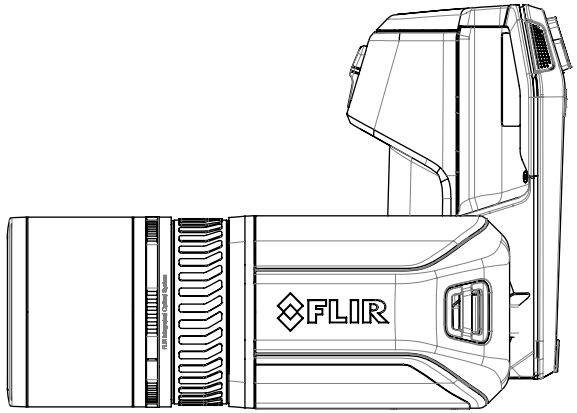


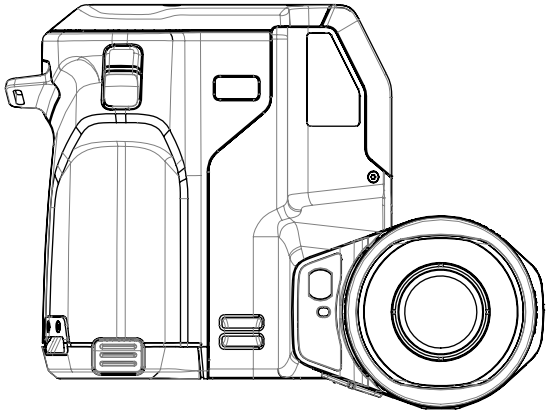

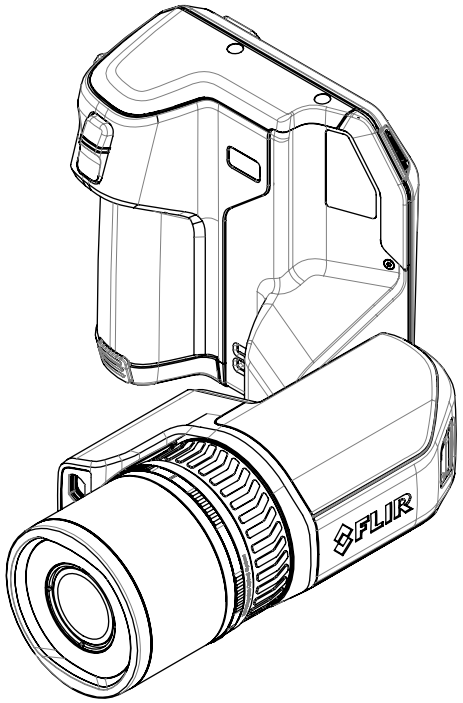


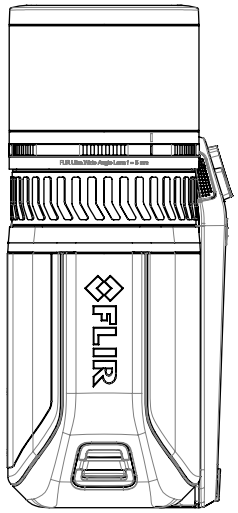


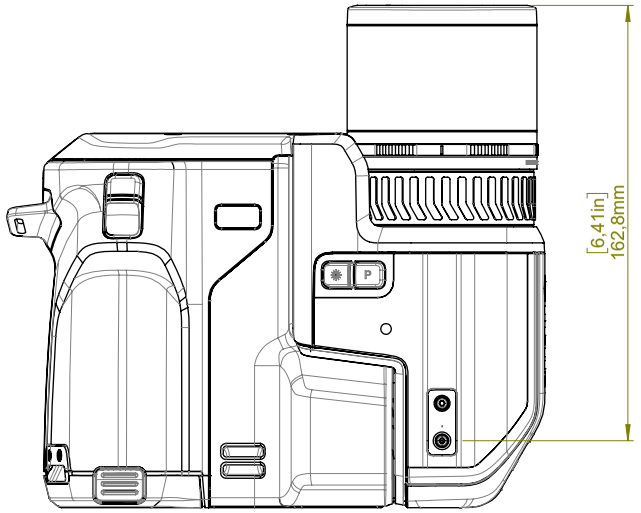


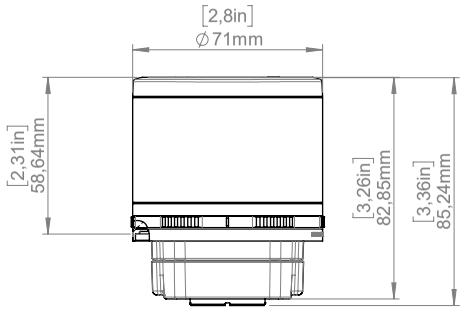


For additional dimensions see page 1

| Modified by | Approved by | Modified |
|---|---|---|
| A. Agardson | AKZE | 2023-09-29 |

This document does not contain any export-controlled information.

| Size | Sheet |
|---|---|
| A3 | 5(6) |

Denomination: Basic dimensions FLIR T5xx

| Scale | Drawing No | Rev |
|---|---|---|
| 1:5 | T129991 | D |

Denna handling får ej delges annan, kopieras i sin helhet eller delar, utan vårt medgivande. Överträdelse härav beivras med stöd av gällande lag.
FLIR SYSTEMS AB

This document must not be communicated or copied completely or in part, without our permission. Any infringement will lead to legal proceedings.
FLIR SYSTEMS AB

# Battery Charger

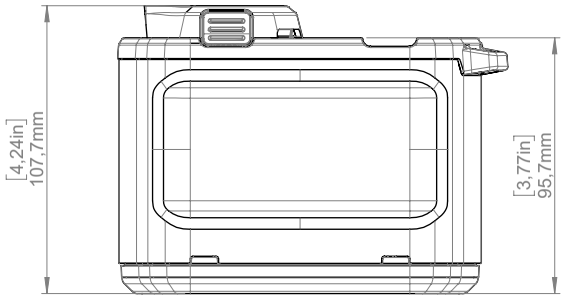


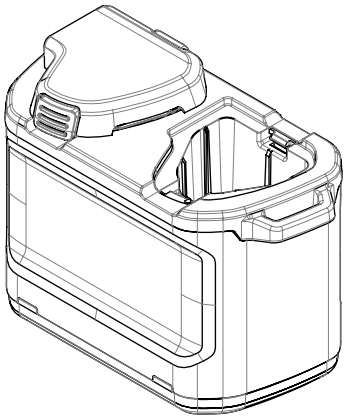

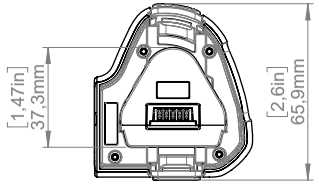


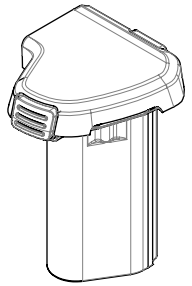

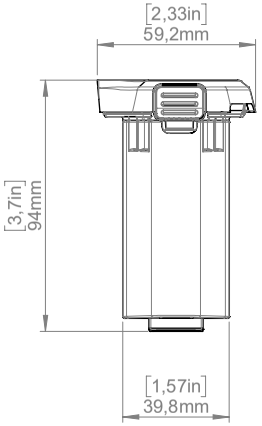


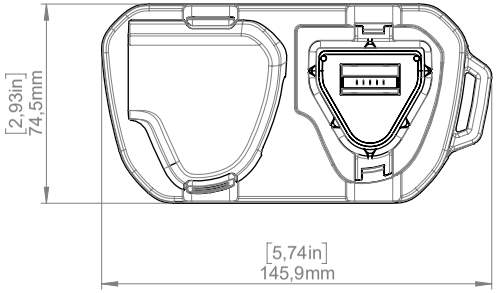


| | | | |
|---|---|---|---|
| Modified by: A. Agardson | Approved by: AKZE | Modified: 2023-09-29 | FLIR |
| This document does not contain any export-controlled information. | | Size: A3 | |
| Denomination: Basic dimensions FLIR T5xx | | Scale: 1:5 | Sheet: 6(6) |
| | | Drawing No: T129991 | Rev: D |

Denna handling får ej delges annan, kopieras i sin helhet eller delar utan vårt medgivande. Överträdelse härav beivras med stöd av gällande lag.
FLIR SYSTEMS AB