FLIR T1020 45°

P/N: 72501-0103

Copyright

© 2022, FLIR Systems, Inc.

All rights reserved worldwide. Names and marks appearing herein are either registered trademarks or trademarks of FLIR Systems and/or its subsidiaries. All other trademarks, trade names or company names referenced herein are used for identification only and are the property of their respective owners.

Document identity

Publ. No.: 72501-0103
Commit: 85220
Language:
Modified: 2022-05-20
Formatted: 2022-05-20

Website

http://www.flir.com

Customer support

http://support.flir.com

Disclaimer

Specifications subject to change without further notice. Camera models and accessories subject to regional market considerations. License procedures may apply. Products described herein may be subject to US Export Regulations. Please refer to exportquestions@flir.com with any questions.



General description	
The FLIR T1020 is designed for the expert requiring the highest performance and the latest technology available. The camera combines excellent ergonomics and feature-rich flexibility with superior image quality at an infrared resolution of 1024 × 768 pixels.	
Benefits: • Flexible and feature rich: A wide variety of measuring and analysis functions make the FLIR T1020 flexible for your every need. Two programmable buttons provide easy access to favorite functions. • Highest performance with the latest technology: The FLIR T1020 is equipped with the innovative Multi Spectral Dynamic Imaging (MSX) feature, which produces an image richer in detail than ever before. With its continuous autofocus, the FLIR T1020 is a fully automatic infrared camera. • Support for UltraMax: When enabling UltraMax in the camera, the resolution of images can be substantially enhanced when importing the images into a FLIR Thermography software.	

Imaging and optical data	
IR resolution	1024 × 768 pixels
MSX resolution	1024 × 768 pixels
UltraMax	Yes
Thermal sensitivity/NETD	<20 mK @ +30°C (+86°F)
Field of view (FOV)	45° × 34°
Minimum IR focus distance	0.2 m (0.66 ft.)
Minimum IR–visual alignment distance	0.5 m (1.64 ft.)
Focal length	21.2 mm (0.83 in.)
Spatial resolution (IFOV)	0.80 mrad
Lens identification	Automatic
F-number	1.1
Image frequency	30 Hz
Focus	One shot or manual
Digital zoom	1–8× continuous
Digital image enhancement	Adaptive digital noise reduction

Detector data	
Detector type	Focal plane array (FPA), uncooled microbolometer
Spectral range	7.5–14 µm
Detector pitch	17 µm
Time constant	< 12 ms

FLIR T1020 45°

P/N: 72501-0103
© 2022, FLIR Systems, Inc.
#72501-0103; r. 85220;

Image presentation	
Display	Built-in touch screen, 4.3 in. wide screen LCD, 800 × 480 pixels
Display type	Capacitive touch screen
Auto orientation	Automatic landscape or portrait
Viewfinder	Built-in 800 × 480 pixels
Automatic image adjustment	Continuous, histogram based
Automatic image adjustment, type	Standard or histogram based on the image content
Manual image adjustment	Linear based, possible to adjust level/span/max./min.

Image presentation modes	
Image modes	Thermal, thermal MSX, picture in picture, digital camera
Infrared image	Full color infrared image
Visual image	Full color visual image
Multi Spectral Dynamic Imaging (MSX)	Thermal image with enhanced detail presentation
Picture in Picture	Resizable and movable infrared area on the visual image
Gallery	• Review thumbnail/full image on the camera • Edit measurements/palettes/image modes on the camera

Measurement	
Camera temperature range	• –40 to 150°C (–40 to 302°F) • 0 to 650°C (32 to 1202°F) • 300 to 2000°C (572 to 3632°F)
Object temperature range and accuracy	• Range –40 to 150°C (–40 to 302°F): ◦ –40 to 5°C (–40 to 41°F): ±2°C (±3.6°F) ◦ 5 to 100°C (41 to 212°F): ±1°C (±1.8°F) ◦ 100 to 150°C (212 to 302°F): ±1% • Range 0 to 650°C (32 to 1202°F): ◦ 0 to 100°C (32 to 212°F): ±2°C (±3.6°F) ◦ 100 to 650°C (212 to 1202°F): ±2% • Range 300 to 2000°C (572 to 3632°F): ±2%

NOTE

For HSI use, above 30 Hz frame rate, the typical accuracy will be ±2.5°C (±4.5°F), or 2.5% of reading @ 25°C (77°F).

A special calibration is required for your T10xx camera to work with the HSI box. Therefore, the HSI box needs to be ordered with the camera, or when ordered separately, the special calibration can be added to the camera later on by a FLIR Service Center.

Inspection mode	
FLIR Inspection route	Enabled in the camera

Measurement analysis	
Spotmeter	10
Area	5 + 5 areas (boxes and circles) with max./min./average
Profile	1 line profile with max./min. temperature
Automatic hot/cold detection	Auto hot or cold spotmeter markers within the area and profile

P/N: 72501-0103
© 2022, FLIR Systems, Inc.
#72501-0103; r. 85220;

Measurement analysis	
Measurement presets	No measurements, Center spot, Hot spot, Cold spot, User preset 1, User preset 2
User presets	The user can select and combine measurements from any number of spots/boxes/circles/profiles/ delta
Difference temperature	Delta temperature between the measurement functions and the reference temperature
Reference temperature	Manually set using the difference temperature
Atmospheric transmission correction	Automatic, based on the inputs for distance, atmospheric temperature, and relative humidity
Optics transmission correction	Automatic, based on signals from internal sensors
Emissivity correction	Variable from 0.01 to 1.0 or selected from the materials list
Reflected apparent temperature correction	Automatic, based on the input of the reflected temperature
External optics/windows correction	Automatic, based on the inputs of the window transmission and temperature
Measurement corrections	Emissivity, reflected temperature, relative humidity, atmospheric temperature, object distance, external infrared window compensation
Colors (palettes)	Iron, Rainbow, Rainbow HC, White hot, Black hot, Arctic, Lava

Alarm	
Color alarm (isotherm)	• Above • Below • Interval • Condensation (moisture/humidity/dewpoint) • Insulation
Measurement function alarm	Audible/visual alarms (above/below) on any selected measurement function

Set-up	
Set-up commands	Define user presets, Save options, Programmable button, Reset options, Set up camera, Wi-Fi, GPS & compass, Bluetooth, Language, Time & units, Camera information
Languages	Arabic, Czech, Danish, Dutch, English, Finnish, French, German, Greek, Hungarian, Italian, Japanese, Korean, Norwegian, Polish, Portuguese, Russian, simplified Chinese, Swedish, traditional Chinese, Turkish

Service functions	
Camera software update	Using USB cable or SD card

Storage of images	
Image storage	Standard JPEG, including digital image and measurement data, on a memory card
Storage media	Removable media SD or SDHC card. Class 10 or better recommended
Image storage mode	• Simultaneous storage of thermal and digital images in the same JPEG file • Option to store a digital photo as a separate JPEG file
Time lapse	15 seconds to 24 hours

P/N: 72501-0103
© 2022, FLIR Systems, Inc.
#72501-0103; r. 85220;

Storage of images	
File formats	• Standard JPEG, measurement data included • CSQ, measurement data included
File formats, visual	Standard JPEG, automatically associated with the corresponding thermal image

Image annotations	
Voice	60 seconds (via Bluetooth) stored with the image
Text	Add table, select between predefined templates
Image description	Add short note (stored in the JPEG exif tag)
Sketch	• Draw on the thermal/digital image or add predefined stamps • Separate PC software with extensive report generation
METERLiNK	Wireless connection (Bluetooth) to: FLIR meters with METERLiNK

Geographic Information System	
GPS	Location data automatically added to every image from the built-in GPS
Compass	Camera direction automatically added to every image

Video recording in camera	
Radiometric IR-video recording	Real-time radiometric recording (RTRR) to the memory card
Non-radiometric IR-video recording	H.264 to the memory card
Visual video recording	H.264 to the memory card

Video streaming	
Radiometric IR-video streaming	Real-time radiometric streaming (RTRS) via USB
Non-radiometric IR-video streaming	• H.264 video using Wi-Fi • H.264 video using USB
Visual video streaming	• H.264 video using Wi-Fi • H.264 video using USB

Digital camera	
Built-in digital camera	5 Mpixel with LED light
Digital camera	Field of view adapts to the infrared lens
Video lamp	Built-in LED light

Laser pointer	
Laser	Activated by a dedicated button
Laser alignment	Position is automatically displayed on the infrared image
Laser classification	Class 2
Laser type	Semiconductor AlGaInP diode laser, 1 mW, 635 nm (red)

Data communication interfaces	
Interfaces	USB Micro-B, Bluetooth, Wi-Fi, HDMI
METERLiNK/Bluetooth	Communication with headset and external sensors

P/N: 72501-0103
© 2022, FLIR Systems, Inc.
#72501-0103; r. 85220;

Data communication interfaces	
Wi-Fi	Infrastructure (network) or AP
SD Card	One card slot for removable SD memory cards
Audio	Microphone headset via Bluetooth for the voice annotation of images

USB	
USB	USB Micro-B: data transfer/video
USB, standard	• USB 2.0 High Speed • USB Micro-B connector

Video	
Video out	• HDMI 640 × 480 • HDMI 1280 × 720 • DVI 640 × 480 • DVI 800 × 600
Video, connector type	HDMI type C

Radio	
Wi-Fi	• Standard: 802.11 b/g/n • Frequency range: 2412–2462 MHz • Max. output power: 15 dBm
METERLiNK/Bluetooth	Frequency range: 2402–2480 MHz, supports 2.1 and 4.0
Antenna	Internal

Power system	
Battery type	Rechargeable Li ion battery
Battery operating time	>2.5 hours at 25°C (+68°F) and typical use
Charging system	In camera (AC adapter or 12 V from a vehicle) or two-bay charger
Charging time	2.5 hours to 90% capacity, charging status indicated by LEDs
Charging temperature	0°C to +45°C (+32°F to +113°F), except for the Korean market: +10°C to +45°C (+50°F to +113°F)
External power operation	AC adapter 90–260 V AC, 50/60 Hz or 12 V from a vehicle (cable with a standard plug, optional)
Power management	Automatic power-off functionality, user configurable between 5 minutes, 20 minutes, and no automatic shutdown
Battery documents	For documents like MSDS and UN38.3 test reports/summaries, see: https://support.flir.com/resources/msds

Environmental data	
Operating temperature range	–15°C to +50°C (+5°F to +122°F)
Storage temperature range	–40 to +70°C (–40 to +158°F)
Humidity (operating and storage)	IEC 60068-2-30 / 24 hours, 95% relative humidity, 25–40°C (77–104°F) / 2 cycles
EMC	• ETSI EN 301 489-1 (radio) • ETSI EN 301 489-17 • EN 61000-6-2 (Immunity) • EN 61000-6-3 (Emission) • FCC 47 CFR Part 15 Class B (Emission) • ICES-003

FLIR T1020 45°

P/N: 72501-0103
© 2022, FLIR Systems, Inc.
#72501-0103; r. 85220;

Environmental data	
Radio spectrum	• ETSI EN 300 328 • FCC Part 15.247 • RSS-247 Issue 2
Encapsulation	IP 54 (IEC 60529)
Shock	25 g (IEC 60068-2-29)
Vibration	2 g (IEC 60068-2-6)
Safety	EN/UL/CSA/PSE 60950-1
Declaration of conformity	See: https://support.flir.com/resources/DoC
Ergonomics	The viewfinder plus the 120° rotating optical block allow you to point the camera in multiple directions while maintaining a comfortable position

Physical data	
Weight	2.0 kg (4.3 lb.)
Camera size, excl. lens (L × W × H)	167.2 mm × 204.5 mm × 188.3 mm (6.6 in. × 8.0 in. × 7.4 in.)
Tripod mounting	UNC ¼"-20
Housing material	Magnesium

Warranty information	
Warranty	• 2 years parts and labor coverage on the camera • 5 years coverage on the battery • 10 years coverage on the detector – the most vital part of the whole camera

Shipping information	
List of contents	• Infrared camera with lens • Battery (2 ea.) • Battery charger • Bluetooth headset • Calibration certificate • License card: FLIR Thermal Studio Pro (3 month subscription) + FLIR Route Creator Plugin for Thermal Studio Pro (3 month subscription) • Hard transport case • HDMI-HDMI cable • Lens cap • Memory card • Neck strap • Power supply, including multi-plugs • Printed documentation • USB cable, Std A to Micro-B
EAN-13	7332558010297
UPC-12	845188010935
Country of origin	Sweden

Supplies & accessories:

- T199745; IR lens, f=142 mm (7°) with case and mounting support
- T199066; IR lens, f=21.2 mm (45°) with case
- T199064; IR lens, f=36 mm (28°) with case
- T199077; IR lens, f=83.4 mm (12°) with case
- T910814; Power supply, incl. multi plugs
- T198126; Battery charger, incl. power supply with multi plugs T6xx

P/N: 72501-0103
© 2022, FLIR Systems, Inc.
#72501-0103; r. 85220;

- T199364ACC; Battery Li-ion 3.65 V, 8.5 Ah, 32 Wh
- T911975ACC; Memory card SD 16 GB
- T198509; Cigarette lighter adapter kit, 12 VDC, 1.2 m/3.9 ft.
- T910930ACC; HDMI type C to DVI cable 1.5 m
- T910891ACC; HDMI type C to HDMI type A cable 1.5 m
- T198869ACC; Hard transport case for FLIR T10xx series
- T300030; Option, No radio
- T300194; FLIR SC kit T10xx
- T128829ACC; Neck strap
- T198497; Large eyecup
- T850105; FLIR Inspection Route - Camera Option
- T198533; USB cable Std A <-> Micro B
- T911093; Tool belt
- T197771ACC; Bluetooth Headset
- APP-10002; FLIR Tools Mobile (Android Application)
- APP-10003; FLIR Tools Mobile (iPad/iPhone Application)
- T198586; FLIR Reporter Professional (license only)
- T300243; FLIR Thermal Studio Pro, 1 Year Subscription
- T300083; FLIR Thermal Studio Pro, Perpetual license
- T300341; FLIR Thermal Studio Standard, 1 Year Subscription
- T300258; FLIR Thermal Studio Standard, Perpetual license
- T199233; FLIR Atlas SDK for .NET
- 4232535; FLIR Research Studio, Professional Edition - 1 Year Subscription (online activation)
- 4232556; FLIR Research Studio, Professional Edition - Perpetual License (online activation)
- 4232590; FLIR Research Studio, Professional Edition - Perpetual License (USB dongle)
- 4220499; FLIR Research Studio, Standard Edition - 1 Year Subscription (online activation)
- 4220500; FLIR Research Studio, Standard Edition - Perpetual License (online activation)
- 4220646; FLIR Research Studio, Standard Edition - Perpetual License (USB dongle)
- 4232591; FLIR ResearchIR to Research Studio, Professional Edition - 1 Year License Upgrade

Camera housing

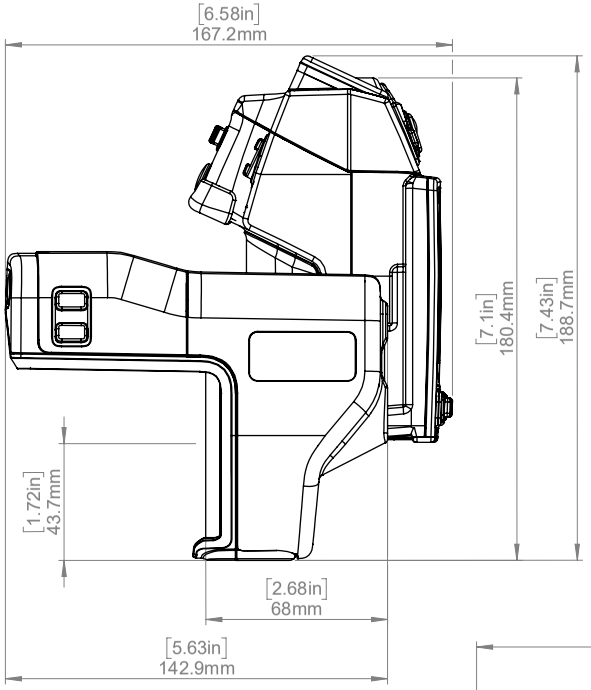

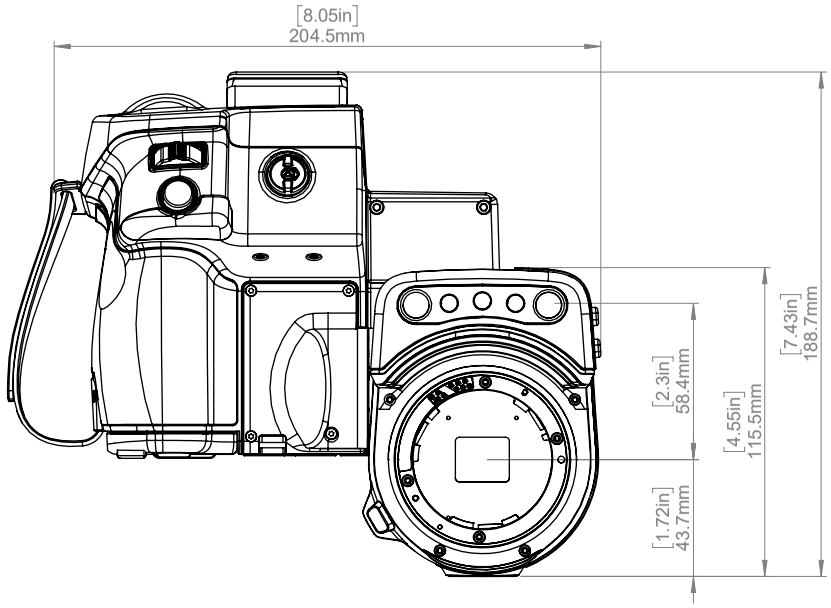

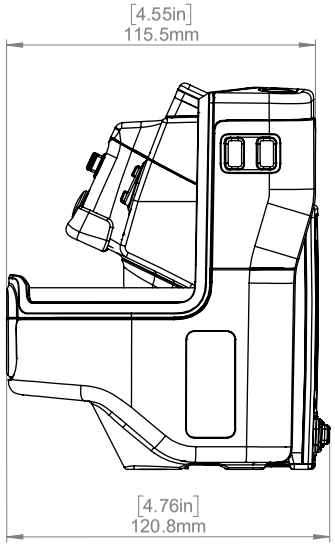

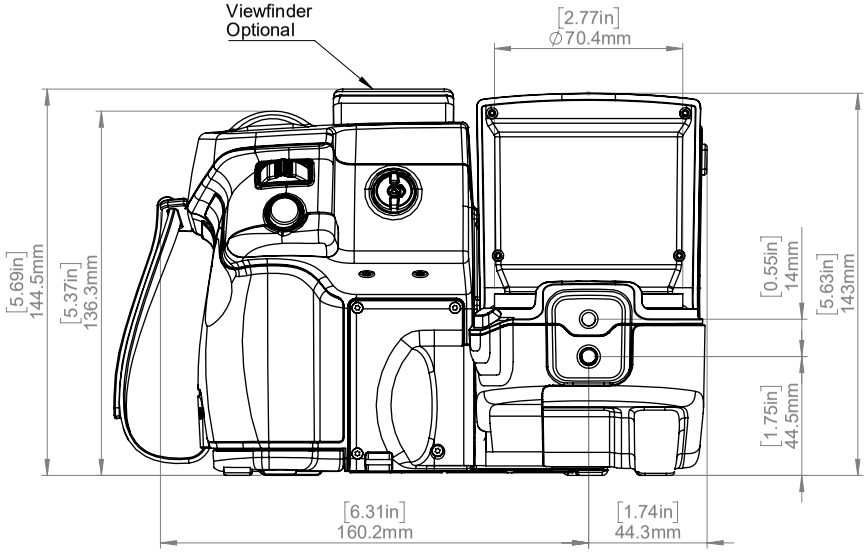

Modified	Check	Drawn by
2018-10-15	JOHE	R&D Thermography

Denomination

Basic dimensions FLIR T10xx

Size	Scale	Sheet
A3	1:2	1(8)

Drawing No.	Size
T128849	F

© 2012, FLIR Systems, Inc. All rights reserved worldwide. No part of this drawing may be reproduced, stored in a retrieval system, or transmitted in any form, or by any means, electronic, mechanical, photocopying, recording, or otherwise, without written permission from FLIR Systems, Inc. Specifications subject to change without further notice. Dimensional data is based on nominal values. Products may be subject to regional market considerations. License procedures may apply. Product may be subject to US Export Regulations. Please refer to exportquestions@flir.com with any questions. Diversion contrary to US law is prohibited.

IR-LENS 7° (f=142mm) incl support

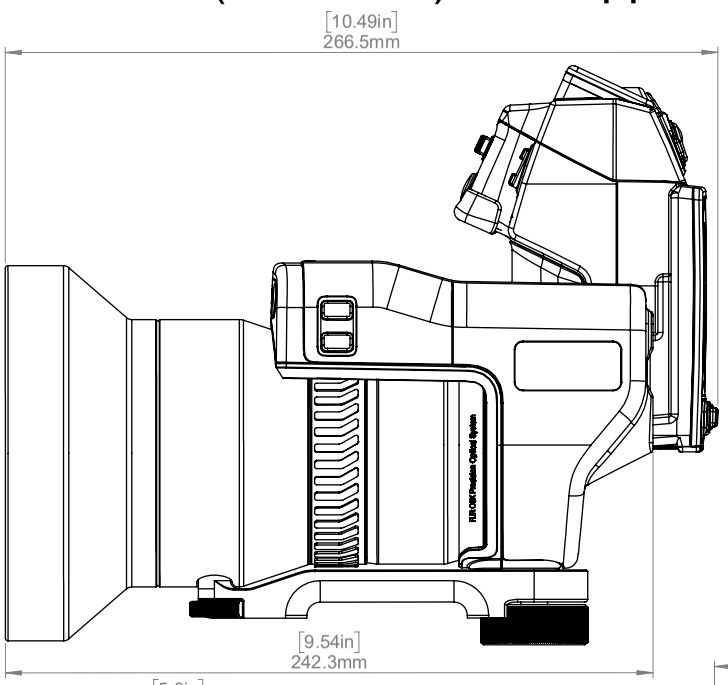

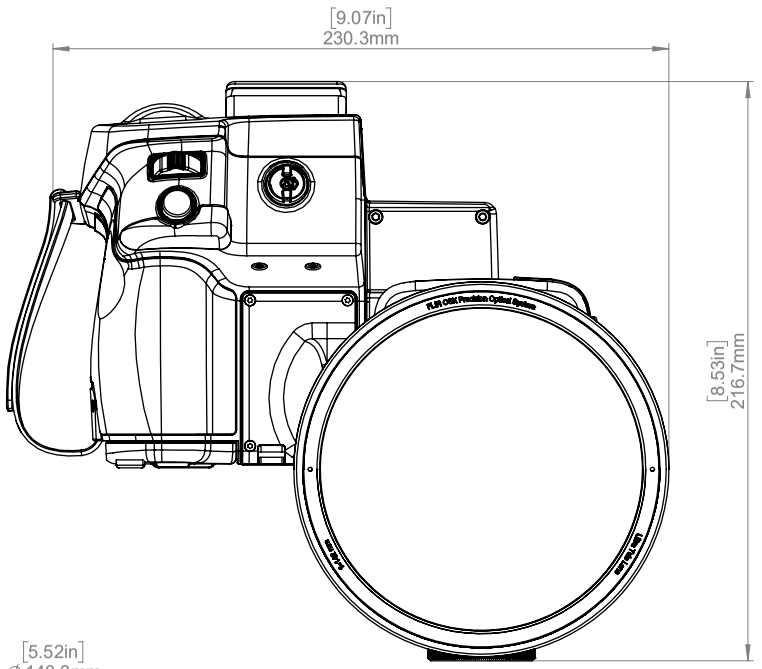

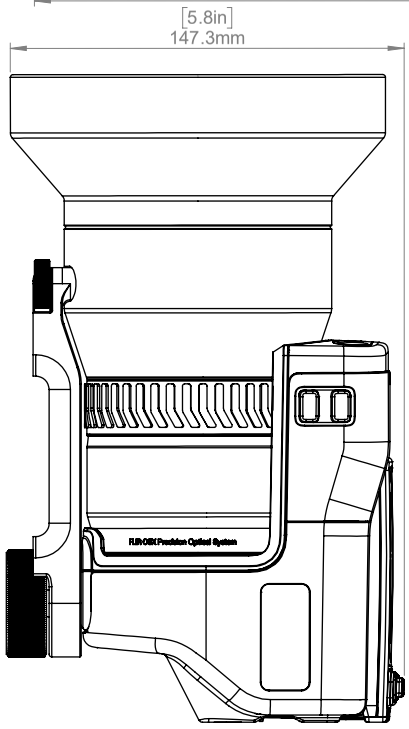

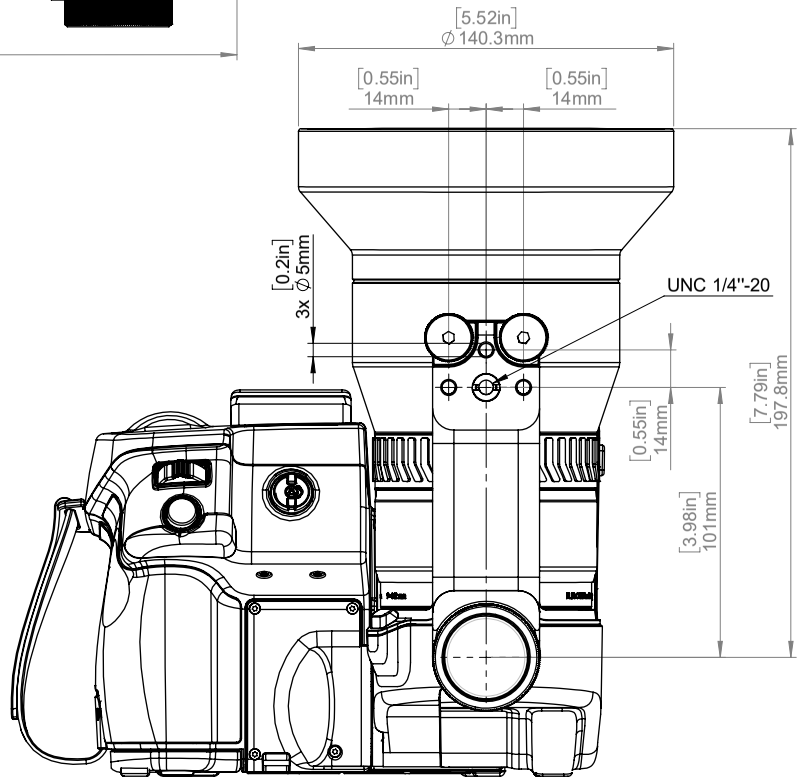

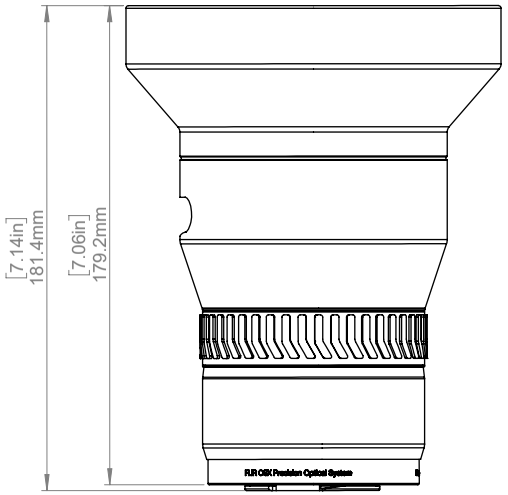

Modified	Check	Drawn by
2018-10-15	JOHE	R&D Thermography

Denomination

Basic dimensions FLIR T10xx

Size	Sheet
A3	2(8)
Scale 1:2	
Drawing No. T128849	Size F

© 2012, FLIR Systems, Inc. All rights reserved worldwide. No part of this drawing may be reproduced, stored in a retrieval system, or transmitted in any form, or by any means, electronic, mechanical, photocopying, recording, or otherwise, without written permission from FLIR Systems, Inc. Specifications subject to change without further notice. Dimensional data is based on nominal values. Products may be subject to regional market considerations. License procedures may apply. Product may be subject to US Export Regulations. Please refer to exportquestions@flir.com with any questions. Diversion contrary to US law is prohibited.

IR-LENS 12° (f=83,4mm)

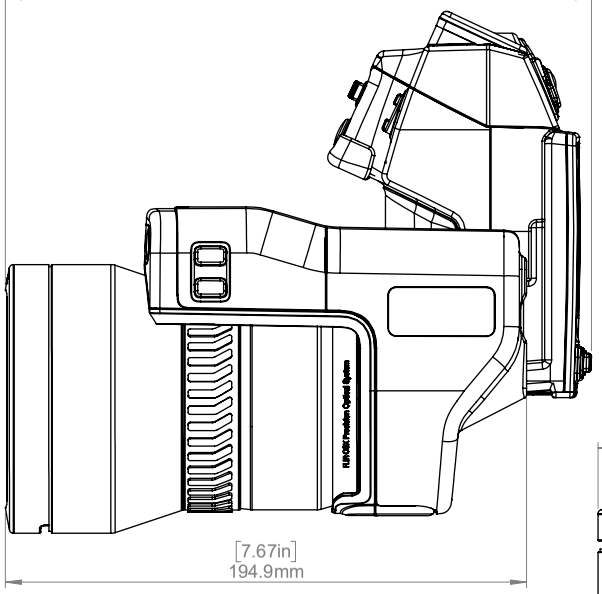

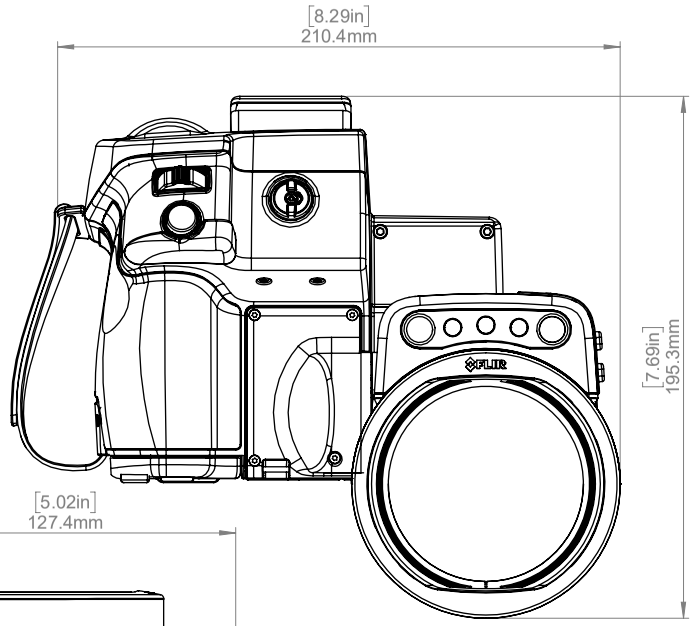

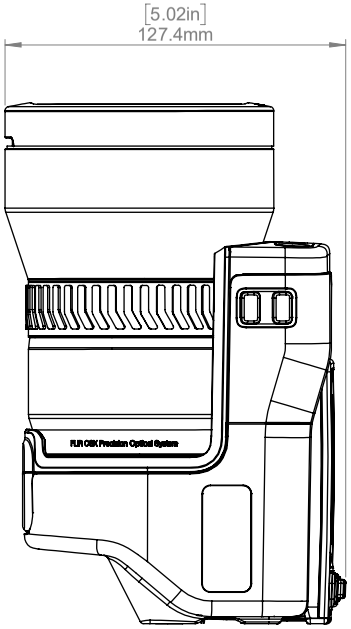

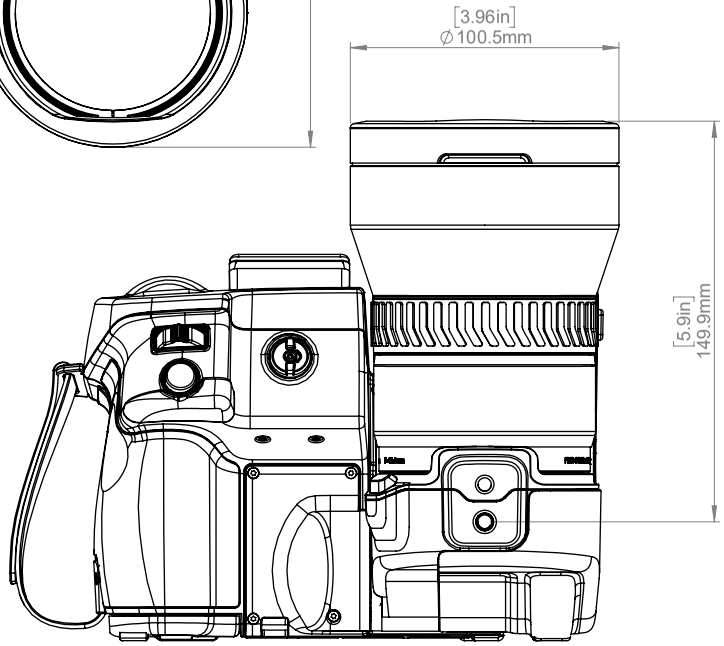

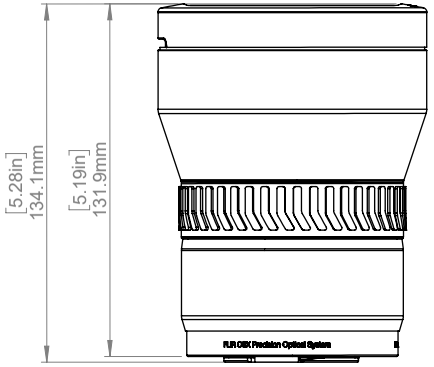

Modified	Check	Drawn by
2018-10-15	JOHE	R&D Thermography

Denomination

Basic dimensions FLIR T10xx

Size	Sheet
A3	3(8)

Scale 1:2

Drawing No.	Size
T128849	F

© 2012, FLIR Systems, Inc. All rights reserved worldwide. No part of this drawing may be reproduced, stored in a retrieval system, or transmitted in any form, or by any means, electronic, mechanical, photocopying, recording, or otherwise, without written permission from FLIR Systems, Inc. Specifications subject to change without further notice. Dimensional data is based on nominal values. Products may be subject to regional market considerations. License procedures may apply. Product may be subject to US Export Regulations. Please refer to exportquestions@flir.com with any questions. Diversion contrary to US law is prohibited.

IR-LENS 28° (f=36mm)

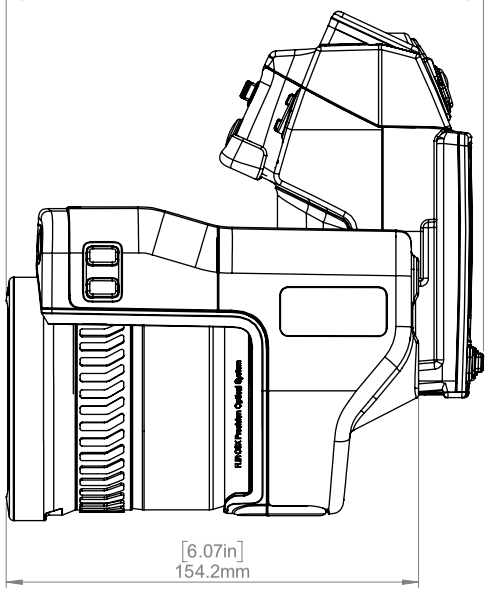

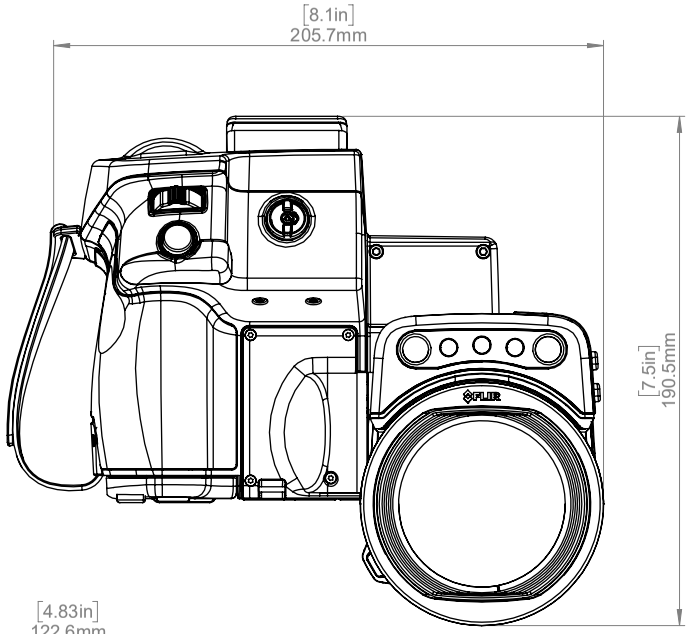

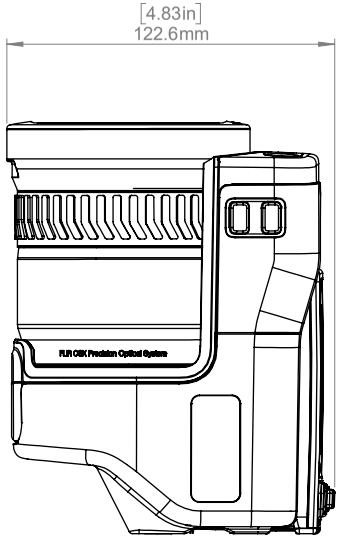

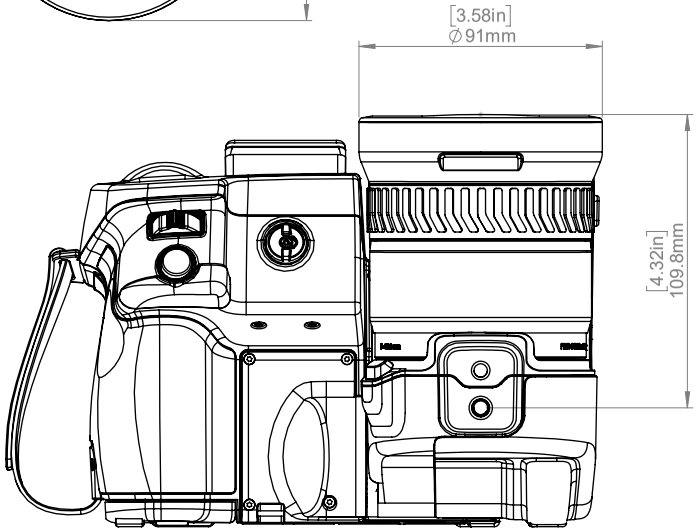

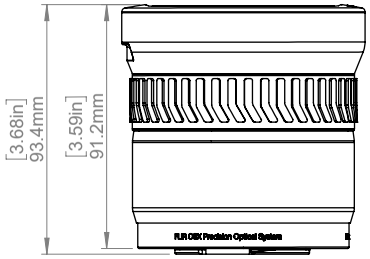

Modified	Check	Drawn by
2018-10-15	JOHE	R&D Thermography

Denomination

Basic dimensions FLIR T10xx

Size	Sheet
A3	4(8)

Scale 1:2

Drawing No.	Size
T128849	F

© 2012, FLIR Systems, Inc. All rights reserved worldwide. No part of this drawing may be reproduced, stored in a retrieval system, or transmitted in any form, or by any means, electronic, mechanical, photocopying, recording, or otherwise, without written permission from FLIR Systems, Inc. Specifications subject to change without further notice. Dimensional data is based on nominal values. Products may be subject to regional market considerations. License procedures may apply. Product may be subject to US Export Regulations. Please refer to exportquestions@flir.com with any questions. Diversion contrary to US law is prohibited.

IR-LENS 45° (f=21,2mm)

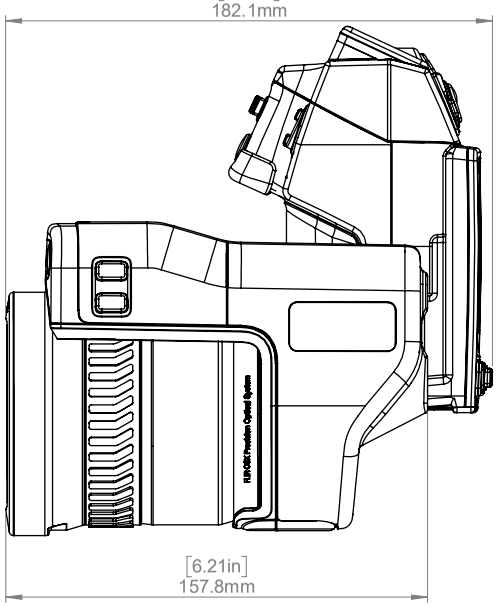

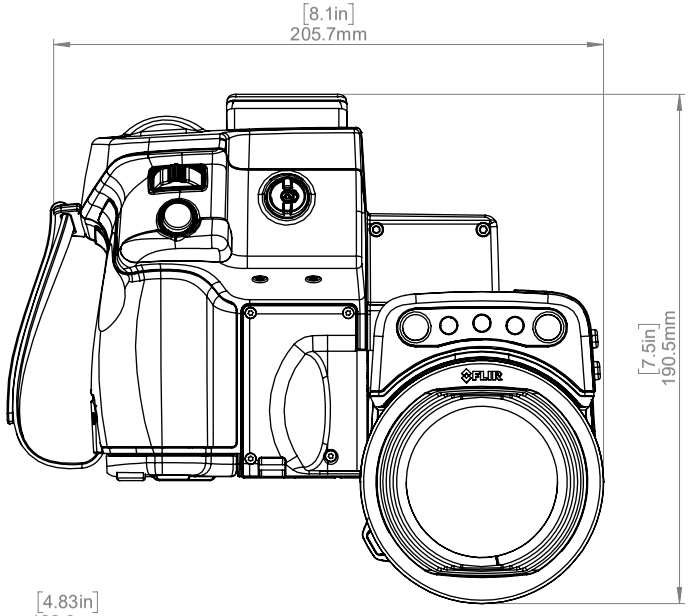

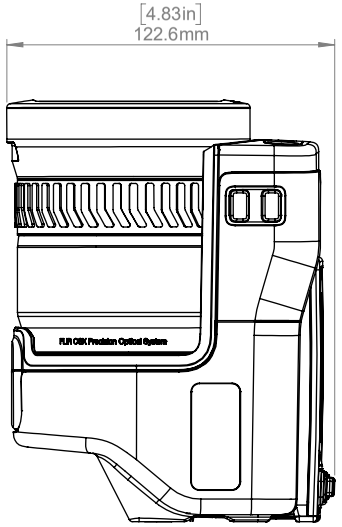

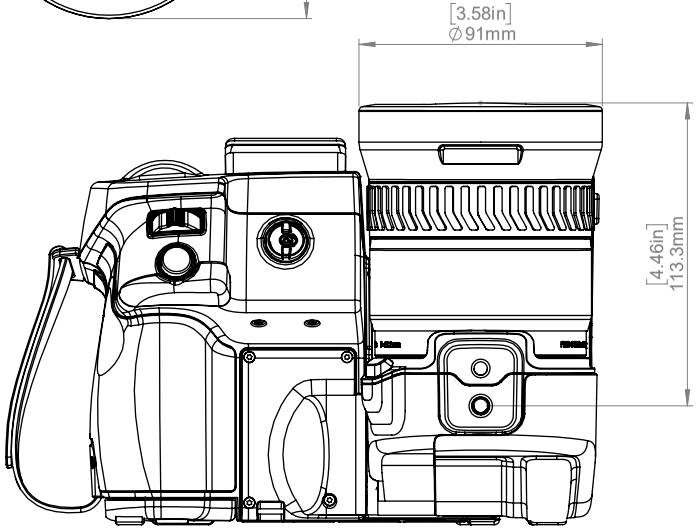

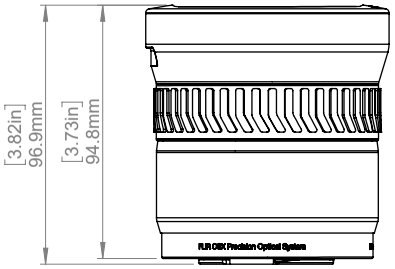

Modified	Check	Drawn by
2018-10-15	JOHE	R&D Thermography

Denomination

Basic dimensions FLIR T10xx

Size	Sheet
A3	5(8)

Scale 1:2

Drawing No.	Size
T128849	F

© 2012, FLIR Systems, Inc. All rights reserved worldwide. No part of this drawing may be reproduced, stored in a retrieval system, or transmitted in any form, or by any means, electronic, mechanical, photocopying, recording, or otherwise, without written permission from FLIR Systems, Inc. Specifications subject to change without further notice. Dimensional data is based on nominal values. Products may be subject to regional market considerations. License procedures may apply. Product may be subject to US Export Regulations. Please refer to exportquestions@flir.com with any questions. Diversion contrary to US law is prohibited.

IR-LENS CLOSE-UP (3X)

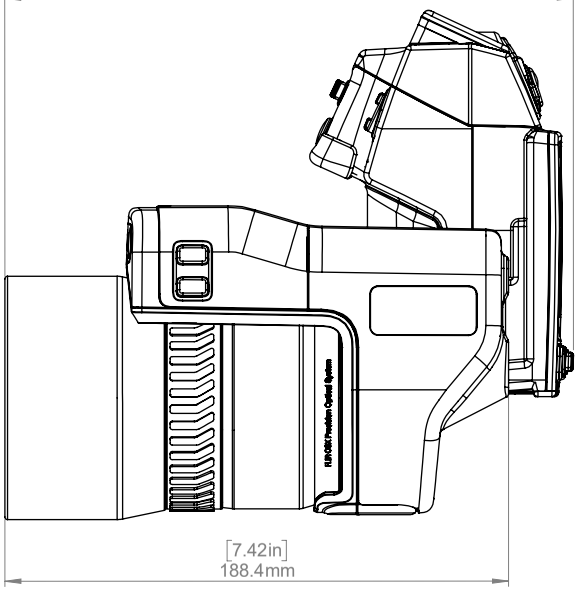

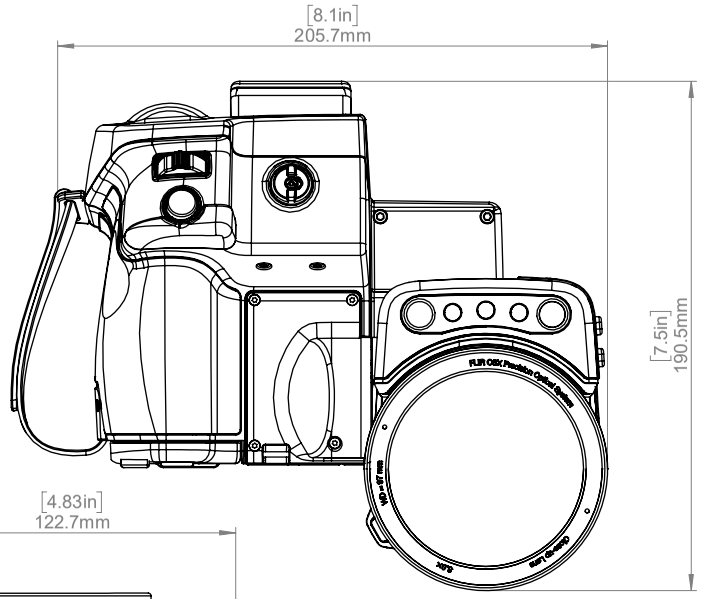

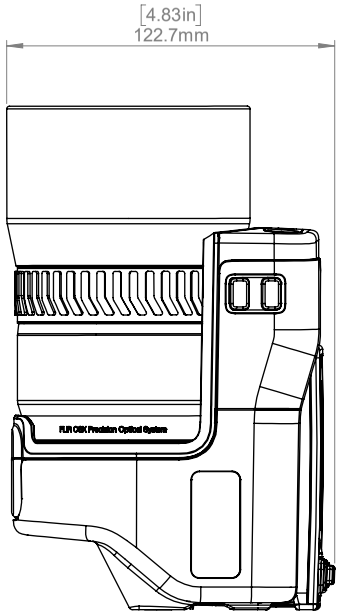

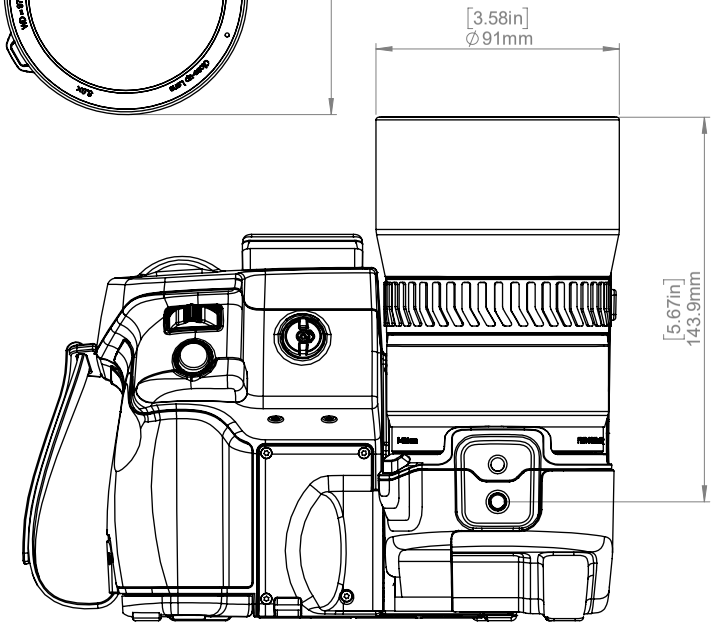

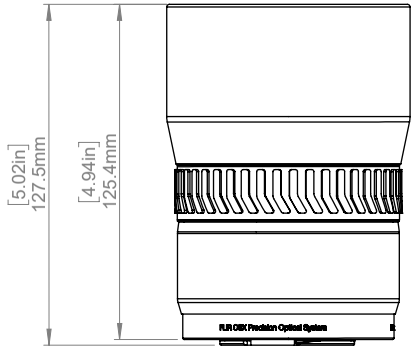

Modified	Check	Drawn by
2018-10-15	JOHE	R&D Thermography

Denomination

Basic dimensions FLIR T10xx

Size	Sheet
A3	6(8)

Scale 1:2

Drawing No.	Size
T128849	F

© 2012. FLIR Systems, Inc. All rights reserved worldwide. No part of this drawing may be reproduced, stored in a retrieval system, or transmitted in any form, or by any means, electronic, mechanical, photocopying, recording, or otherwise, without written permission from FLIR Systems, Inc. Specifications subject to change without further notice. Dimensional data is based on nominal values. Products may be subject to regional market considerations. License procedures may apply. Product may be subject to US Export Regulations. Please refer to exportquestions@flir.com with any questions. Diversion contrary to US law is prohibited.