FLUKE®

1732/1734
1736/1738
3540 FC

Logger/Monitor

Calibration Manual

BC

March 2016 Rev. 2, 1/20
©2016-2020 Fluke Corporation. All rights reserved.
All product names are trademarks of their respective companies.
Specifications are subject to change without notice.

LIMITED WARRANTY AND LIMITATION OF LIABILITY

Each Fluke product is warranted to be free from defects in material and workmanship under normal use and service. The warranty period is two years and begins on the date of shipment. Parts, product repairs, and services are warranted for 90 days. This warranty extends only to the original buyer or end-user customer of a Fluke authorized reseller, and does not apply to fuses, disposable batteries, or to any product which, in Fluke's opinion, has been misused, altered, neglected, contaminated, or damaged by accident or abnormal conditions of operation or handling. Fluke warrants that software will operate substantially in accordance with its functional specifications for 90 days and that it has been properly recorded on non-defective media. Fluke does not warrant that software will be error free or operate without interruption.

Fluke authorized resellers shall extend this warranty on new and unused products to end-user customers only but have no authority to extend a greater or different warranty on behalf of Fluke. Warranty support is available only if product is purchased through a Fluke authorized sales outlet or Buyer has paid the applicable international price. Fluke reserves the right to invoice Buyer for importation costs of repair/replacement parts when product purchased in one country is submitted for repair in another country.

Fluke's warranty obligation is limited, at Fluke's option, to refund of the purchase price, free of charge repair, or replacement of a defective product which is returned to a Fluke authorized service center within the warranty period.

To obtain warranty service, contact your nearest Fluke authorized service center to obtain return authorization information, then send the product to that service center, with a description of the difficulty, postage and insurance prepaid (FOB Destination). Fluke assumes no risk for damage in transit. Following warranty repair, the product will be returned to Buyer, transportation prepaid (FOB Destination). If Fluke determines that failure was caused by neglect, misuse, contamination, alteration, accident, or abnormal condition of operation or handling, including overvoltage failures caused by use outside the product's specified rating, or normal wear and tear of mechanical components, Fluke will provide an estimate of repair costs and obtain authorization before commencing the work. Following repair, the product will be returned to the Buyer transportation prepaid and the Buyer will be billed for the repair and return transportation charges (FOB Shipping Point).

THIS WARRANTY IS BUYER'S SOLE AND EXCLUSIVE REMEDY AND IS IN LIEU OF ALL OTHER WARRANTIES, EXPRESS OR IMPLIED, INCLUDING BUT NOT LIMITED TO ANY IMPLIED WARRANTY OF MERCHANTABILITY OR FITNESS FOR A PARTICULAR PURPOSE. FLUKE SHALL NOT BE LIABLE FOR ANY SPECIAL, INDIRECT, INCIDENTAL OR CONSEQUENTIAL DAMAGES OR LOSSES, INCLUDING LOSS OF DATA, ARISING FROM ANY CAUSE OR THEORY.

Since some countries or states do not allow limitation of the term of an implied warranty, or exclusion or limitation of incidental or consequential damages, the limitations and exclusions of this warranty may not apply to every buyer. If any provision of this Warranty is held invalid or unenforceable by a court or other decision-maker of competent jurisdiction, such holding will not affect the validity or enforceability of any other provision..

Fluke Corporation
P.O. Box 9090
Everett, WA 98206-9090
U.S.A.

Fluke Europe B.V.
P.O. Box 1186
5602 BD Eindhoven
The Netherlands

11/99

Table of Contents

Title	Page
Introduction	1
How to Contact Fluke	1
Safety Information	1
Specifications	2
General Specifications	2
Environmental Specifications	2
Electrical Specifications	3
Maintenance	7
How to Clean	7
Battery Replacement	7
Replacement Parts	8
Setup	9
Required Equipment	9
Equipment Assembly	10
173x Calibration Cable Assembly	10
173x AUX Input Calibration Cable	11
Verification Box Assembly	13
System Requirements	14
USB Communication	14
How to Use the Spreadsheet	14
Basic Instrument Setup for all Verifications	18
Accuracy Verification Procedure	19
Voltage Measurement	19
Current Measurement	20
AUX Input Check (1732/1734/1736/1738 Only)	21
Optional Verification for Flexi or Clamp (Combined Logger and Probe Specifications)	21
173x Auxiliary Input Adapter Verification (1732/1734/1736/1738 Only)	24
Calibration Adjust Procedure	26

Introduction

⚠⚠ Warning

To avoid electric shock or personal injury, do not perform the calibration verification tests or calibration procedures described in this manual unless you are qualified to do so. The information provided in this manual is for the use of qualified personnel only.

This Calibration Manual provides all the information necessary to perform basic maintenance and make calibration adjustments for the:

- 1736/1738 Power Logger
- 1732/1734 Energy Logger
- 3540 FC Power Monitor

For complete operating instructions, refer to the *Users Manual* on the USB drive provided with your product or at www.fluke.com.

How to Contact Fluke

To contact Fluke, call one of the following telephone numbers:

- Technical Support USA: 1-800-44-FLUKE (1-800-443-5853)
- Calibration/Repair USA: 1-888-99-FLUKE (1-888-993-5853)
- Canada: 1-800-36-FLUKE (1-800-363-5853)
- Europe: +31 402-675-200
- Japan: +81-3-6714-3114
- Singapore: +65-6799-5566
- China: +85-400-921-0835
- Brazil: +55-11-3530-8901
- Anywhere in the world: +1-425-446-5500

Or, visit Fluke's website at www.fluke.com.

To register your product, visit http://register.fluke.com.

To view, print, or download the latest manual supplement, visit http://us.fluke.com/usen/support/manuals.

Safety Information

General Safety Information is in the printed Safety Information document that ships with the Product and at www.fluke.com. More specific safety information is listed where applicable.

Specifications

General Specifications

Display	4.3-inch active matrix color TFT, 480 pixels x 272 pixels, resistive touch panel
Power/Charging/LED Indicator	
Warranty	
173x/3540 FC and Power Supply	2 years (battery not included)
Accessories	1 year
Calibration Cycle	2 years
Dimensions	
173x/3540 FC	19.8 cm x 16.7 cm x 5.5 cm (7.8 in x 6.6 in x 2.2 in)
Power Supply	13.0 cm x 13.0 cm x 4.5 cm (5.1 in x 5.1 in x 1.8 in)
173x/3540 FC with power supply attached	19.8 cm x 16.7 cm x 9 cm (7.8 in x 6.6 in x 4.0 in)
Weight	
173x/3540 FC	1.1 kg (2.5 lb)
Power Supply	400 g (0.9 lb)
Tamper Protection	Kensington lock

Environmental Specifications

Operating Temperature	-10 °C to +50 °C (14 °F to 122 °F)
Storage Temperature	-20 C to +60 °C (-4 °F to +140 °F), with battery: -20 °C to +50 °C (-4 °F to +122 °F)
Operating Humidity	<10 °C (<50 °F) non condensing 10 °C to 30 °C (50 °F to 86 °F) ≤95 % 30 °C to 40 °C (86 °F to 104 °F) ≤75 % 40 °C to 50 °C (104 °F to 122 °F) ≤45 %
Operating Altitude	2000 m (up to 4000 m derate to 1000 V CAT II/600 V CAT III/300 V CAT IV)
Storage Altitude	12 000 m
IP Rating	IEC 60529:IP50, in connected condition with protection caps in place
Vibration	MIL-T-28800E, Type 3, Class III, Style B
Safety	
General	IEC 61010-1: Pollution Degree 2
Measurement	IEC 61010-2-033: CAT IV 600 V / CAT III 1000 V
Mains Input	Overvoltage Category II, Pollution Degree 2
Voltage Terminals	Overvoltage Category IV, Pollution Degree 2
Li-ion Battery	IEC 62133
Electromagnetic Compatibility (EMC)	
International	IEC 61326-1: Industrial CISPR 11: Group 1, Class A *Group 1: Equipment has intentionally generated and/or uses conductively-coupled radio frequency energy that is necessary for the internal function of the equipment itself.* *Class A: Equipment is suitable for use in all establishments other than domestic and those directly connected to a low-voltage power supply network that supplies buildings used for domestic purposes. There may be potential difficulties in ensuring electromagnetic compatibility in other environments due to conducted and radiated disturbances.* *Emissions that exceed the levels required by CISPR 11 can occur when the equipment is connected to a test object.*
Korea (KCC)	Class A Equipment (Industrial Broadcasting & Communication Equipment) *Class A: Equipment meets requirements for industrial electromagnetic wave equipment and the seller or user should take notice of it. This equipment is intended for use in business environments and not to be used in homes.*
USA (FCC)	47 CFR 15 subpart B. This product is considered an exempt device per clause 15.103.

Wireless Radio with Adapter

Frequency Range	2412 MHz to 2462 MHz
Output Power	<100 mW

Electrical Specifications

Power Supply

Voltage Range	nominal 100 V to 500 V (85 V min to 550 V max) using safety plug input
Mains Power	nominal 100 V to 240 V (85 V min to 265 V max) using IEC 60320 C7 input
Power consumption	Maximum 50 VA (max. 15 VA when powered using IEC 60320 input)
Standby Power	<0.3 W only when powered using IEC 60320 input
Efficiency	≥68.2 % (in accordance with energy efficiency regulations)
Mains Frequency	50/60 Hz ±15 %
Battery	Li-ion 3.7 V, 9.25 Wh, customer-replaceable
Operating temperature	0 °C to 45 °C (32 °F to 113 °F)
Storage temperature	-20 °C to +50 °C (-4 °F to +122 °F)
Charge	0 °C to 45 °C (32 °F to 113 °F)
On-Battery Runtime	Up to 4 hr (up to 5.5 hr in energy saving mode)
Charging Time	<6 hr

Voltage Inputs

Number of Inputs	4 (3 phases and neutral)
Maximum Input Voltage	1000 V_{rms} (1700 V_{pk}) phase to neutral
Input Impedance	10 MΩ each phase to neutral
Bandwidth	42.5 Hz to 3.5 kHz
Scaling	1:1, variable

Current Inputs

Number of Inputs	
1736/1738	4, mode selected automatically for attached sensor
1732/1734/3540 FC	3, mode selected automatically for attached sensor
Current Sensor Output Voltage	
Clamp	500 mV_{rms} / 50 mV_{rms}; CF 2.8
Rogowski Coil	150 mV_{rms} / 15 mV_{rms} at 50 Hz, 180 mV_{rms} / 18 mV_{rms} at 60 Hz; CF 4; all at nominal probe range
Range	1 A to 150 A / 10 A to 1500 A with iFlex1500-12 3 A to 300 A / 30 A to 3000 A with iFlex3000-24 6 A to 600 A / 60 A to 6000 A with iFlex6000-36 40 mA to 4 A / 0.4 A to 40 A with 40 A clamp i40s-EL
Bandwidth	42.5 Hz to 3.5 kHz
Scaling	1:1, variable

Auxiliary Inputs (1732/1734/1736/1738 only)

Wired Connection	
Number of Inputs	2
Input Range	0 V dc to ±10 V dc
Wireless Connection (requires WiFi/BLE adapter USB1 FC)	
Number of Inputs	2
Supported Modules	Fluke Connect 3000 series
Acquisition	1 reading/s
Scale factor	Format: mx + b (Gain and offset) user configurable
Displayed units	User configurable (up to 8 characters, for example °C, psi, or m/s)

Data Acquisition

Resolution	16-bit synchronous sampling
Sampling Frequency	10.24 kHz at 50/60 Hz, synchronized to mains frequency
Input Signal Frequency	50/60 Hz (42.5 Hz to 69 Hz)
Wiring Configurations	1-Φ, 1-Φ IT, Split phase, 3-Φ wye, 3-Φ wye IT, 3-Φ wye balanced, 3-Φ delta, 3-Φ Aron/Blondel (2-element delta), 3-Φ delta open leg, 3-Φ high leg delta, 3-Φ delta balanced. Currents only (load studies)

Data Storage	Internal flash memory (not user replaceable)
Memory Size	
1732/1734/1736/1738	Typical 10 logging sessions of 8 weeks with 1-minute intervals and 100 events The number of actual logging sessions and logging period depends on user requirements.
3540 FC	Typical is 1 offline logging session of 1 week with 1 s intervals. The actual number of logging sessions and logging period depends on user requirements.

Basic Interval

1732/1734/1736/1738	
Measured Parameter	Voltage, Current, Aux, Frequency, THD V, THD A, Power, Power Factor, fundamental Power, DPF, Energy
Averaging Interval	User selectable: 1 sec, 5 sec, 10 sec, 30 sec, 1 min, 5 min, 10 min, 15 min, 30 min
Total Harmonic Distortion	THD for voltage and current is calculated on 25 harmonics
Averaging interval of min/max values	
Voltage, Current	Full cycle RMS (20 ms at 50 Hz, 16.7 ms at 60 Hz)
Aux, Power	200 ms
3540 FC	
Measured Parameter	Voltage, Current, Frequency, THD V, THD A, Power, Power Factor, fundamental Power, DPF
Averaging Interval	1 sec
Total Harmonic Distortion	THD for voltage and current is calculated on 25 harmonics
Averaging interval of min/max values Voltage, Current	Full cycle RMS (20 ms at 50 Hz, 16.7 ms at 60 Hz)

Demand Interval (Energy Meter Mode: 1732/1734/1736/1738 only)

Measured Parameter	Energy (Wh, varh, VAh), PF, Maximum Demand, Cost of Energy
Averaging Interval	User selectable: 5 min, 10 min, 15 min, 20 min, 30 min, off

Power Quality Measurements (1736/1738 only)

Measured Parameter	Voltage, Frequency, Unbalance, Voltage Harmonics, THD V, Current Harmonics, THD A, and TDD (requires 1736/1738 with IEEE 519/Report license)
Averaging Interval	10 min
Individual Harmonics	2nd … 50th
Total Harmonic Distortion	Calculated on 50 harmonics
Events	Voltage: Dips, Swells, Interruptions Current: Inrush Current
Triggered Recordings	1738 or 1736 with 1736/Upgrade license Half cycle RMS of Voltage and Current Waveform of Voltage and Current

Standards Compliance

Harmonics	IEC 61000-4-7: Class 1 IEEE 519 (short time harmonics, requires IEEE 519/Report license)
Power Quality (1736/1738 only)	IEC 61000-4-30 Class S, IEC62586-1 (PQI-S device)
Power	IEEE 1459
Power Quality Compliance (1738 or 1736 with 1736/Upgrade license)	EN50160 (for measured parameters)

Interfaces

USB-A	File transfer via USB Flash Drive, Firmware updates, max. supply current: 120 mA
WiFi	
Supported modes	Direct connection and connection to infrastructure (1732/1734/1736/1738 requires WiFi-Infrastructure license)
Security	WPA2-AES with pre-shared key
Bluetooth (1732/1734/1736/1738 only)	read auxiliary measurement data from Fluke Connect 3000 series modules (requires WiFi/BLE adapter USB1 FC)
USB-mini	Data download device to PC

Accuracy at Reference Conditions

Parameter			Range	Maximum Resolution	Intrinsic Accuracy at Reference Conditions (% of Reading + % of Range)
Voltage			1000 V	0.1 V	±(0.2 % + 0.01 %)
Current	Direct Input	Rogowski Mode	15 mV	0.01 mV	±(0.3 % + 0.02 %)
			150 mV	0.1 mV	±(0.3 % + 0.02 %)
		Clamp Mode	50 mV	0.01 mV	±(0.2 % + 0.02 %)
			500 mV	0.1 mV	±(0.2 % + 0.02 %)
	1500 A Flex		150 A	0.01 A	±(1 % + 0.02 %)
			1500 A	0.1 A	±(1 % + 0.02 %)
	3000 A Flexi		300 A	1 A	±(1 % + 0.03 %)
			3000 A	10 A	±(1 % + 0.03 %)
	6000 A Flexi		600 A	1 A	±(1.5 % + 0.03 %)
			6000 A	10 A	±(1.5 % + 0.03 %)
	40 A		4 A	1 mA	±(0.7 % + 0.02 %)
			40 A	10 mA	±(0.7 % + 0.02 %)
Frequency			42.5 Hz to 69 Hz	0.01 Hz	±0.1 %
Aux Input[1]			10 Vdc	0.1 mV	±(0.2 % + 0.02 %)
Voltage Min/Max			1000 V	0.1 V	±(1 % + 0.1 %)
Current Min/Max			defined by accessory	defined by accessory	±(5 % + 0.2 %)
THD on Voltage			1000 %	0.1 %	±(2.5 % + 0.05 %)
THD on Current			1000 %	0.1 %	±(2.5 % + 0.05 %)
Voltage Harmonic 2 to 50[2]			1000 %	0.1 %	±(2.5 % + 0.05 %)
Unbalance[2]			100 %	0.1 %	±0.15 %

[1] 1732/1734/1736/1738 only
[2] 1736/1738 only

Power/Energy					
Parameter	**Direct Input [1]**	**iFlex1500-12**	**iFlex3000-24**	**iFlex6000-36**	**i40S-EL**
	Clamp: 50 mV/500 mV Rogowski: 15 mV/150 mV	150 A/1500 A	300 A/3000 A	600/6000 A	4 A/40 A
Power Range W, VA, var	Clamp: 50 W/500 W Rogowski: 15 W/150 W	150 kW/1.5 MW	300 kW/3 MW	600 kW/6 MW	4 kW/40 kW
Max. Resolution W, VA, var	0.1 W	0.01 kW/0.10 kW	1 kW/10 kW	1 kW/10 kW	1 W/10 W
Max. Resolution PF, DPF	0.01				
Phase (Voltage to Current) [1]	±0.2 °	±0.28 °			±1 °
[1] Only for calibration laboratories					

Intrinsic Uncertainty ±(% of measurement value + % of power range)						
Parameter	**Influence Quantity**	**Direct Input [1]**	**iFlex1500-12**	**iFlex3000-24**	**iFlex6000-36**	**i40S-EL**
		Clamp: 50 mV/500 mV Rogowski: 15 mV/150 mV	150 A/1500 A	300 A/3000 A	600/6000 A	4 A/40 A
Active Power P **Active Energy E_a**	PF ≥0.99	0.5 % + 0.005 %	1.2 % + 0.005 %	1.2 % + 0.0075 %	1.7 % + 0.0075 %	1.2 % + 0.005 %
	0.1 ≤PF <0.99	$\left(0.5+\frac{\sqrt{1-PF^2}}{3\times PF}\right)$ % + 0.005 %	$\left(1.2+\frac{\sqrt{1-PF^2}}{2\times PF}\right)$ % + 0.005 %	$\left(1.2+\frac{\sqrt{1-PF^2}}{2\times PF}\right)$ % + 0.0075 %	$\left(1.7+\frac{\sqrt{1-PF^2}}{2\times PF}\right)$ % + 0.0075 %	$\left(1.2+1.7\times\frac{\sqrt{1-PF^2}}{PF}\right)$ % + 0.005 %
Apparent Power S **Apparent Energy E_{ap}**	0 ≤PF ≤1	0.5 % + 0.005 %	1.2 % + 0.005 %	1.2 % + 0.0075 %	1.7 % + 0.0075 %	1.2 % + 0.005 %
Reactive Power Q **Reactive Energy E_r**	0 ≤PF ≤1	2.5 % of measured apparent power/energy				
Power Factor PF **Displacement Power Factor** **DPF/cosφ**	-	Reading ± 0.025				
Additional uncertainty (% of power high-range)	V_{P-N} >250 V	0.015 %	0.015 %	0.0225 %	0.0225 %	0.015 %
[1] Only for calibration laboratories **Reference Conditions:** Environmental: 23 °C ±5 °C, instrument operating for at least 30 minutes, no external electrical/magnetic field, RH <65 % Input conditions: CosΦ/PF=1, Sinusoidal signal f=50/60 Hz, power supply 120 V/230 V ±10 %. Current and power specifications: Input voltage 1 ph: 120 V/230 V or 3 ph wye/delta: 230 V/400 V Input current >10 % of current range Primary conductor of clamps or Rogowski coil in center position Temperature Coefficient: Add 0.1 x specified accuracy for each degree C above 28 °C or below 18 °C						

Example:

Measurement at 120 V/16 A using an iFlex1500-12 in low range. Power Factor is 0.8.

Active power uncertainty σ_ρ:

$$\sigma_\rho = \pm\left(\left(1.2+\frac{\sqrt{1-0.8^2}}{2\times 0.8}\right)+0.005\%\times P_{Range}\right) = \pm(1.575\ \%+0.005\ \%\times 1000\ V\times 150\ A) = \pm(1.575\ \%+7.5\ W)$$

The uncertainty in W is $\pm(1.575\ \%\times 120\ V\times 16\ A\times 0.8+7.5\ W) = \pm 31.7$ W

Apparent power uncertainty σ_S:

$\sigma_S = \pm(1.2\ \%+0.005\ \%\times S_{Range}) = \pm(1.2\ \%+0.005\ \%\times 1000\ V\times 150\ A) = \pm(1.2\ \%+7.5\ VA)$

The uncertainty in VA is $\pm(1.2\ \%\times 120\ V\times 16\ A+7.5\ VA) = \pm 30.54$ VA

Reactive/non-active power uncertainty σ_Q:

$\sigma_Q = \pm(2.5\ \%\times S) = \pm(2.5\ \%\times 120\ V\times 16\ A) = \pm 48\ var$

In case of a measured voltage that is >250 V, the additional error is calculated with:

$Adder = 0.015\ \%\times S_{High\ Range} = 0.015\ \%\times 1000\ V\times 1500\ A = 225$ W/VA/var

Maintenance

If the Logger is used appropriately it does not require special maintenance or repair. Maintenance work may be executed only by trained and qualified personnel. This work may only be done at a company related service center within the guarantee period. See www.fluke.com for locations and contact information of Fluke Service Centers worldwide.

⚠⚠ Warning

To prevent possible electrical shock, fire, or personal injury:

- **Do not operate the Product with covers removed or the case open. Hazardous voltage exposure is possible.**
- **Remove the input signals before you clean the Product.**
- **Use only specified replacement parts.**
- **Have an approved technician repair the Product.**

How to Clean

⚠ Caution

To avoid damage, do not use abrasives or solvents on this instrument.

If the Logger is dirty, wipe it off carefully with a damp cloth (without cleaning agents). Mild soap may be used.

Battery Replacement

The Logger has an internal rechargeable Lithium-ion battery.

To replace the battery:

1. Remove the Power Supply.
2. Unscrew the four screws and remove the battery door.
3. Replace the battery.
4. Fasten the battery door.

⚠ Caution

To prevent damage to the Product, use only original Fluke batteries.

Replacement Parts

Replacement parts and accessories are listed in Table 1. To order parts and accessories, see *How to Contact Fluke*.

Table 1. Replacement Parts

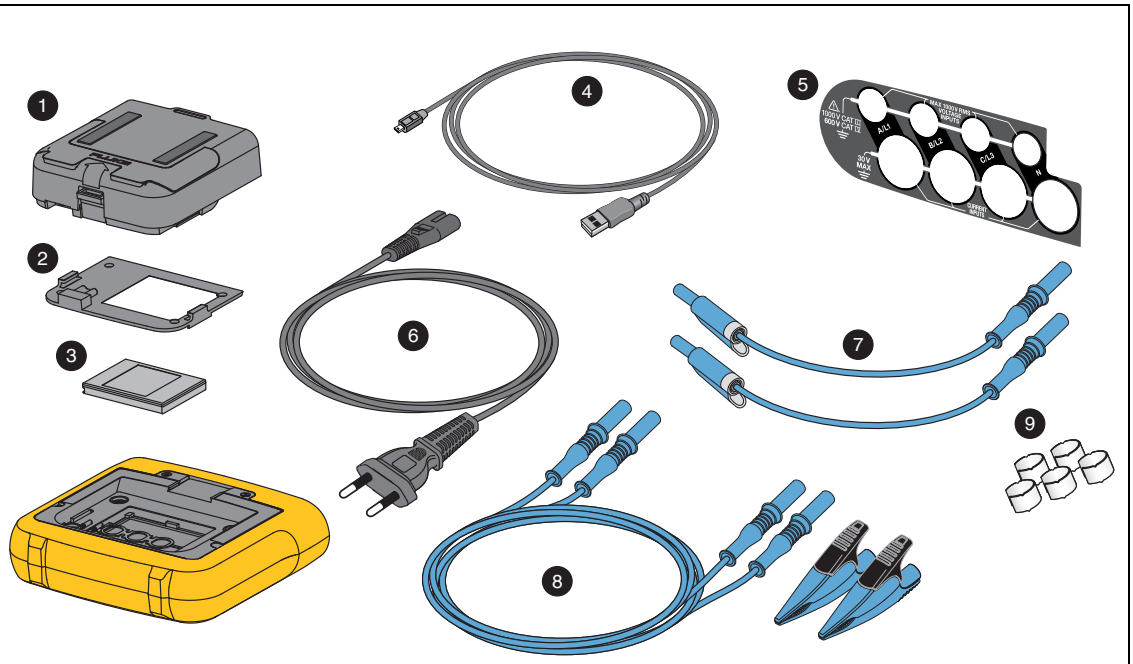

Ref.	Description	Qty.	Fluke Part or Model Number
1	Power Supply	1	4830168
2	Battery Door	1	4388072
3	Battery Pack, Li-ion 3.7 V 2500 mAh	1	4146702
4	USB Cable	1	1671807
5	Input Decal	1	5166455
6	Line Cord, country specific (N. American, Europe, UK, Australia, Japan, India/S. Africa, Brazil)	1	varies
7	Test Leads 0.8 m blue, 1000 V CAT III	1 set	5016873
8	Test Leads 2 m, 2x Alligator Clips, blue, 1000 V CAT III	1 set	5020006
9	Cable Marker	1 set	5046009
not shown	Protective Screen Cover (3540 FC)	1	4815198

Setup

Before you start the verification procedures or make calibration adjustments, refer to this section for the equipment, system, and setup requirements.

Required Equipment

See Table 2 for a list of requirements for the verification tests and calibration adjustment of the Logger.

Table 2. Required Equipment

Equipment	Model	Notes	Used on:	
			Verification Tests	Calibration Adjustment
Calibrator	5522A	5520A is also supported	X	X
Cable Assembly	3PHVL-1730	Voltage Test Lead 3-Phase+N	X	X
173x AUX Input Calibration Cable[1]	NA	1732/1734/1736/1738 only	X	X
173x Calibration Cables – Voltage-to-Current Input Cable Assembly[1]	NA	1732/1734/3540 FC: Qty. 3 required 1736/1738: Qty. 4 required	X	X
173x Verification Box[1]	NA		optional	X
USB cable	type A-to-mini B		X	X
DMM	8846A	for AUX Adapter verification	X	
Coil	5500A/COIL Optional: 52120A with Coils	for Flexi verification	X	
Coil	NA	5 turns	X	
Banana-to-Pin Adapter	Pomona Electronics 4690	for AUX Adapter verification	X	

[1] The 173x calibration cables and verification box are not available from Fluke. See *Equipment Assembly* for information on how to make these items.

Equipment Assembly

The 173x calibration cables and verification box are not available from Fluke. If you plan to calibrate your Product rather than send it to a Fluke Service Center, use the assembly instructions that follow.

173x Calibration Cable Assembly

See Table 3 for instructions on how to make the calibration cables.

Caution

Cable must be marked with "max. 30 V to earth." Any voltage-, category-, or current-ratings on safety plugs must be removed.

Table 3. 173x Calibration Cables, Voltage-to-Current-Input

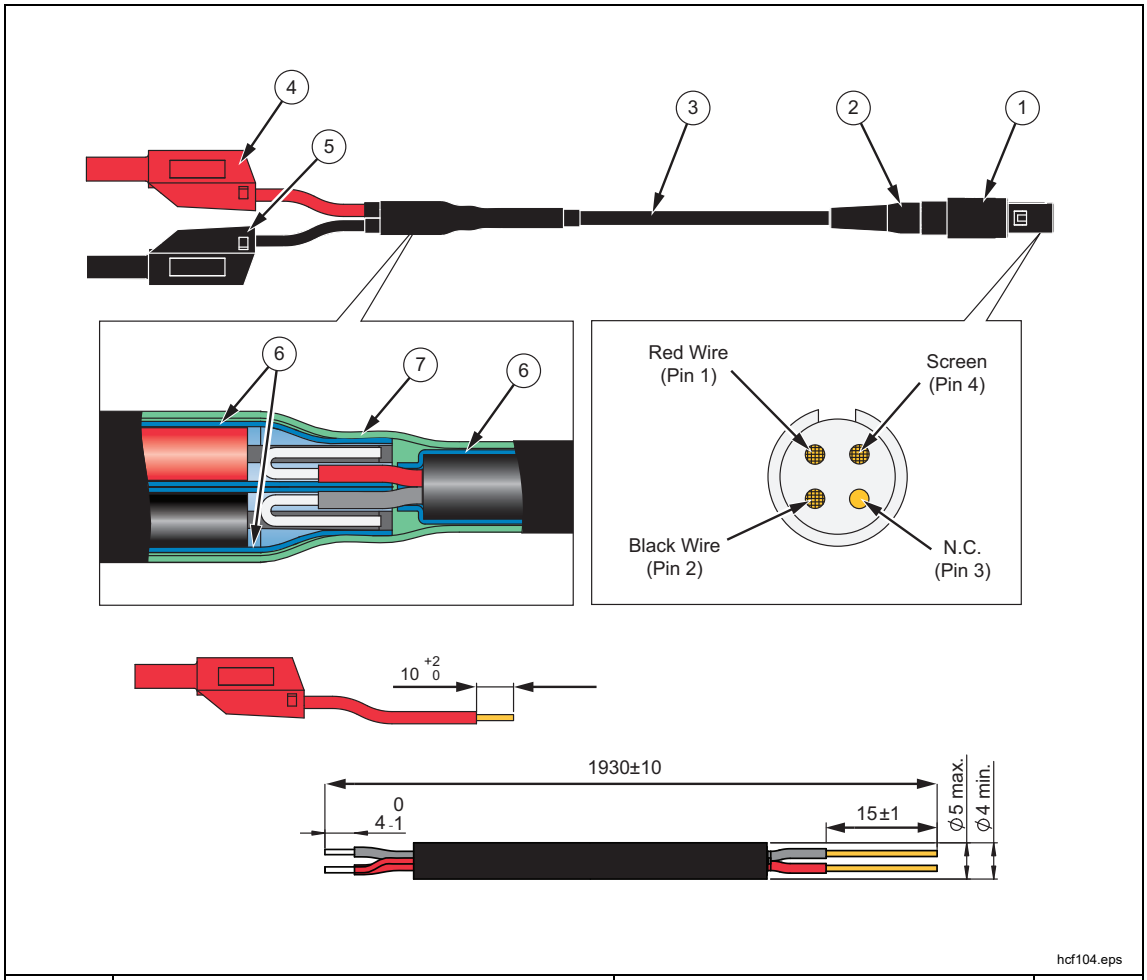

Item	Description	Part Number/Info	QTY
①	Straight Plug, IP50, 4-Pole	ODU: S21M08-P04MJG0-528S	1
②	Cable Bend Relief	ODU: 701-023208965-040	1
③	Signal-Cable, 2x AWG 22-24, shielded	∅4-5 mm (Fluke equiv. # 3803634)	1
④	Test Lead with 4 mm Safety Plug, stackable	red	1
⑤	Test Lead with 4 mm Safety Plug, stackable	black	1
⑥	Heat Shrink Tubing, 2:1	∅=4.8 mm (3/16"); L=35 mm	3
⑦	Heat Shrink Tubing, 3:1, adhesive	∅=12 mm (1/2"); L=60 mm	1

173x AUX Input Calibration Cable

See Table 4 and Figure 1 for instructions on how to make the calibration cable.

⚠ Caution

Cable must be marked with "max. 30 V to earth." Any voltage-, category-, or current-ratings on safety plugs must be removed.

Table 4. 173x AUX Input Calibration Cable

Item	Description	Part Number/Info	QTY
①	Binder: Series 620 - Male Cordset, 4-pole, 2 m	Binder: 79 9241 020 04	1
②	Test Lead 0.75 mm² with 4 mm Banana Plug, stackable	red	2
③	Test Lead 0.75 mm² with 4 mm Banana Plug, stackable	black	2
④	Shrink tube Ø 5-6 mm, black, thin wall, 3:1	L = 30 mm	4
⑤	Shrink tube Ø 8-10 mm, transparent, thin wall, 2:1	L = 45 mm	2
⑥	Shrink tube Ø 10-12 mm, black, thin wall, adhesive, 3:1	L = 30135	1
⑦	Shrink tube Ø 12-14 mm, black, thin wall, 3:1	L = 110 mm	1

Figure 1. 173x AUX Input Calibration Cable

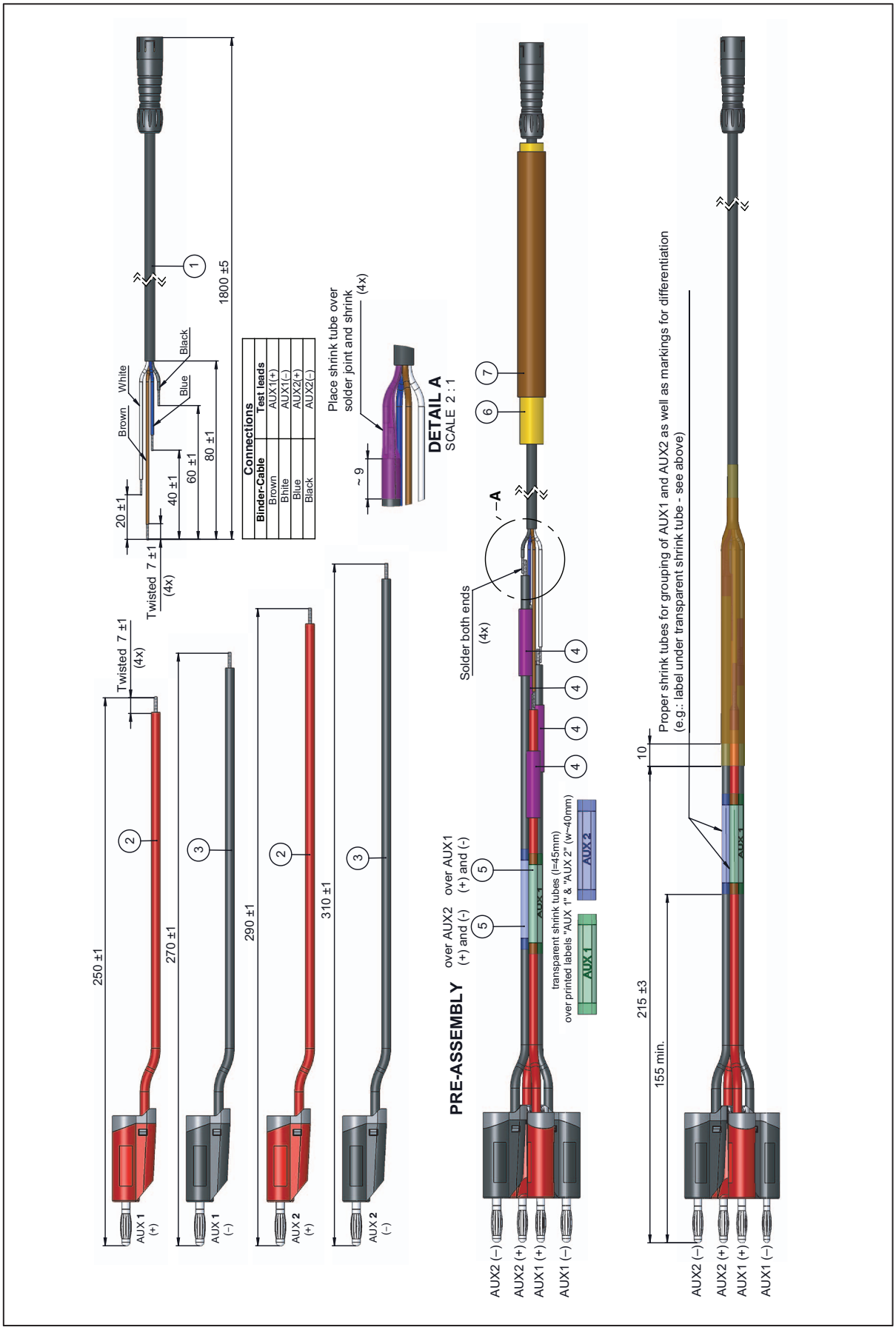

Verification Box Assembly

This Verification Box provides more accurate voltages than a direct connection to the 5520A. The 5520A uses a divider with a 50 Ω output impedance when sourcing <330 mV. Due to variations in the Logger input impedance, the actual applied voltage is less than the programmed voltage. Using an external divider where the parallel resistance is ~30 Ω allows calculation of the applied voltage with confidence that the Logger input loading will not significantly impact the applied voltage.

Fluke recommends using a verification box that has a divider with 30 Ω across the Logger input and 10 kΩ in series with high side of the input. See Table 5 for instructions on how to make the verification box.

Table 5. 1730 Verification Box

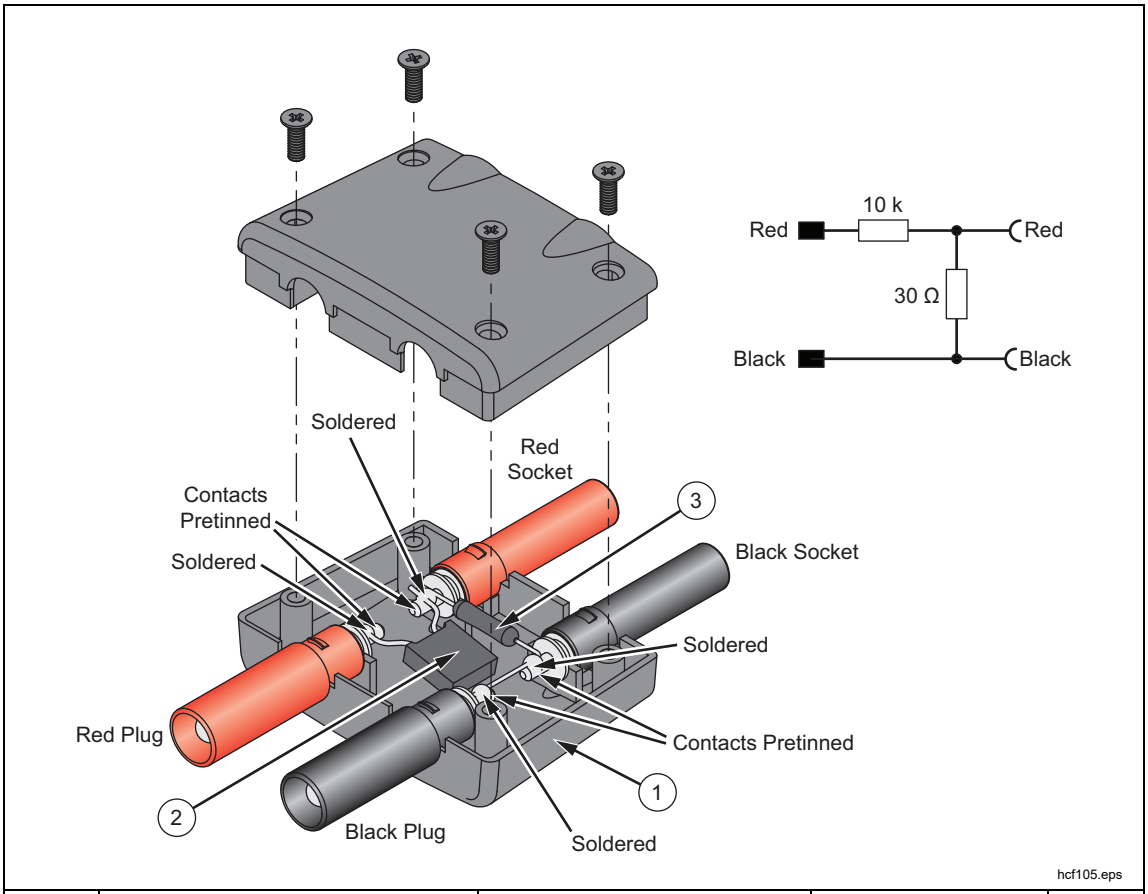

Item	Description	Part Number/Info	Fluke Part Number	QTY
①	Multi-Contact Box: MA 524	Type: XKH-4/19/A Order-No.: 66.9045-33	NA	1
②	Resistor, Metal Foil 10 kΩ, ±0.1 %, 0.6 W, ±4.5 PPM	Red Plug/Red Socket	2114858	1
③	Resistor, 30 Ω, 1W, 1% 20 PPM	Red Socket/Black Socket + Bridge Black Plug/Socket	1757740	1

System Requirements

The system requirements for this verification procedure are:

- WinXP 32-bit, Windows 7 32/64-bit, Windows 8 32/64-bit, Windows 10 32/64-bit
- Monitor, 1280 x 1024 (@4:3) or 1440 x 900 (@16:10), wide-screen (16:10) at higher resolution recommended
- USB 2.0 port
- RS232 port or USB-to-RS232 converter to control the calibrator (optional)
- Microsoft Excel 2010 32-bit software or higher (versions below 2010 not tested)
- Fluke Energy Analyze software

USB Communication

Range changes in the verification can require remote commands to set the range. To communicate between the PC and the Logger, the USB driver must be installed.

- 173x: the USB driver is installed when the Fluke Energy Analyze Plus (FEA+) software is installed.
- 3540 FC: the USB driver is available at www.fluke.com.

To find the COM port:

1. Make sure the instrument is powered and connected with the PC.
2. On the PC keyboard, push **Windows** key and type **R**.
3. Type **devmgmt.msc** and push **ENTER**.
4. Go to **Ports (COM & LPT)** and double-click to open the sub-tree.
5. Find **Fluke 173x Power/Energy Loggers** or **3540 FC Power Monitor**. The port number is shown in parenthesis after this text, for example, COM6.

A detailed description of the spreadsheet is found in the *How to Use the Spreadsheet* section.

How to Use the Spreadsheet

The Excel workbook, *Fluke173x_354x-ExcelTool_Vx.xx.xlsm*, (ExcelTool-available at www.fluke.com), communicates with the Logger using remote commands through the USB ports. The Excel file supports both the 5520A and 5522A Calibrators.

Note

The Excel file uses macros. Make sure execution of macros is enabled on your PC.

Make sure that Fluke Energy Analyze is closed when using the Excel program. After closing Energy Analyze, disconnect and reconnect the USB cable or turn off and turn on the instrument to reset the communication protocol in the instrument.

You must know which COM port the Logger uses to communicate.

To find the COM port:

1. Make sure the instrument is powered and connected with the PC.
2. On the PC keyboard, push **Windows** key and type **R**.
3. Type **devmgmt.msc** and push **ENTER**.
4. Go to Ports (COM & LPT) and double-click to open the sub-tree.
5. Find **Fluke 173x Power/Energy Loggers**. The port number is shown in parenthesis after this phrase, for example, COM6.

The workbook contains sheets for various tasks:

- **Dashboard** – Live measurement parameters, set current input range/mode, COM port configuration
- **Phasor** – Displays a phasor diagram
- **Calibration & Verification** – Procedures to perform the calibration and verification

Dashboard

The Dashboard sheet provides all parameters at a glance that are available with the Meter and Power buttons on the instrument plus the phase angles and calculated Neutral current I_N. You can configure phase mapping, invert current inputs, and set the hardware range/mode of the current inputs, as well as configure the used COM port in the dashboard. These settings are used also in all other sheets. See Table 6.

Table 6. Dashboard in Excel Worksheet

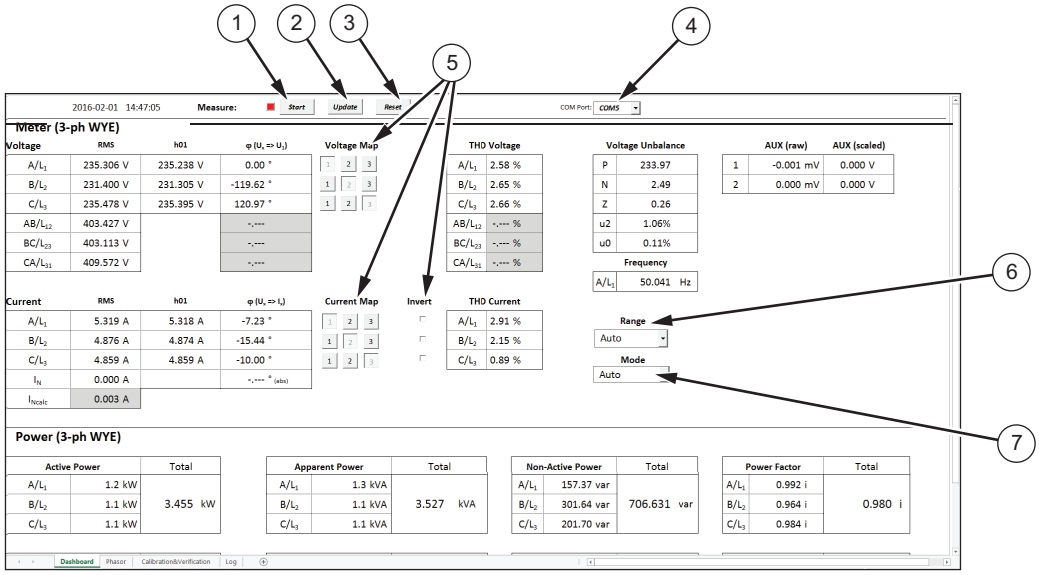

hcf100.eps

Item	Description
①	Start live data read-out. The readings are refreshed every 1 s. Use the same button to stop live updates. During the live updates only the Dashboard and Phasor sheets are accessible.
②	One time live data update.
③	Resets phase mapping and inverted current inputs to default.
④	Selected COM port. Click on the text to get a list of available COM ports. See *USB Communication* for instructions on how to identify the port used by the Logger.
⑤	Phase mapping and inverting current inputs.
⑥	Configure Range as AUTO, High, or Low. Different from the Measurement configuration dialog on the instrument, the settings High and Low can be configured without a connected sensor.
⑦	Configure the current input for Rogowski coils (Flexi coils) or Clamps. When set to AUTO, the attached accessory determines the configuration.

Phasor

The Phasor sheet provides live data read-out as a phasor diagram. See Table 7.

Table 7. Phasor in Excel Worksheet

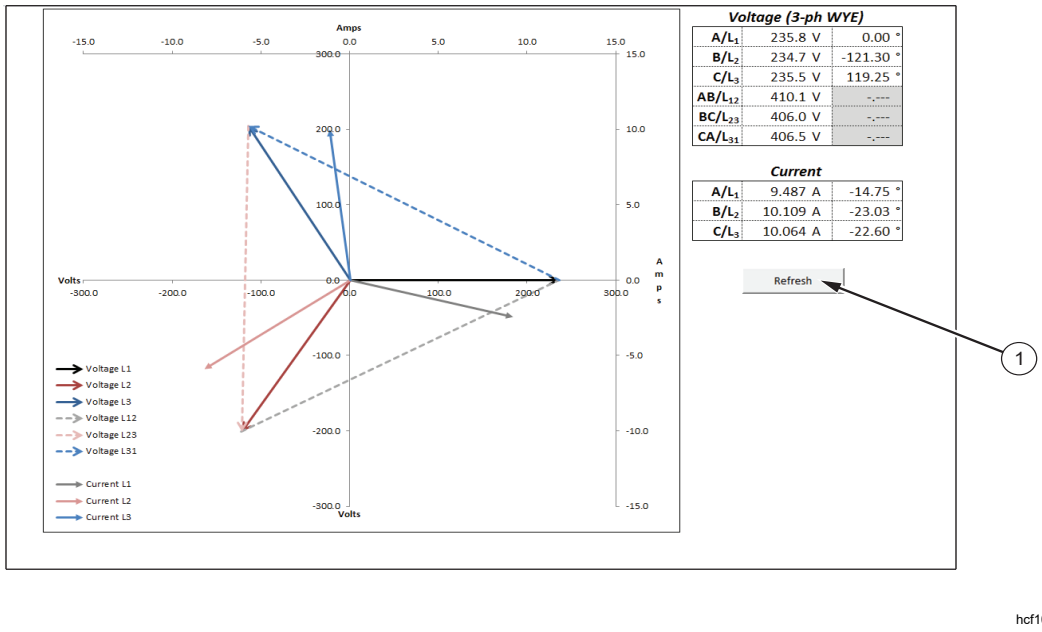

hcf101.eps

Item	Description
①	**Refresh** - One time live data update.

Calibration and Verification

The Calibration and Verification sheet are the built-in procedures. See Table 8.

Table 8. Calibration and Verification in Excel Worksheet

Item	Description
	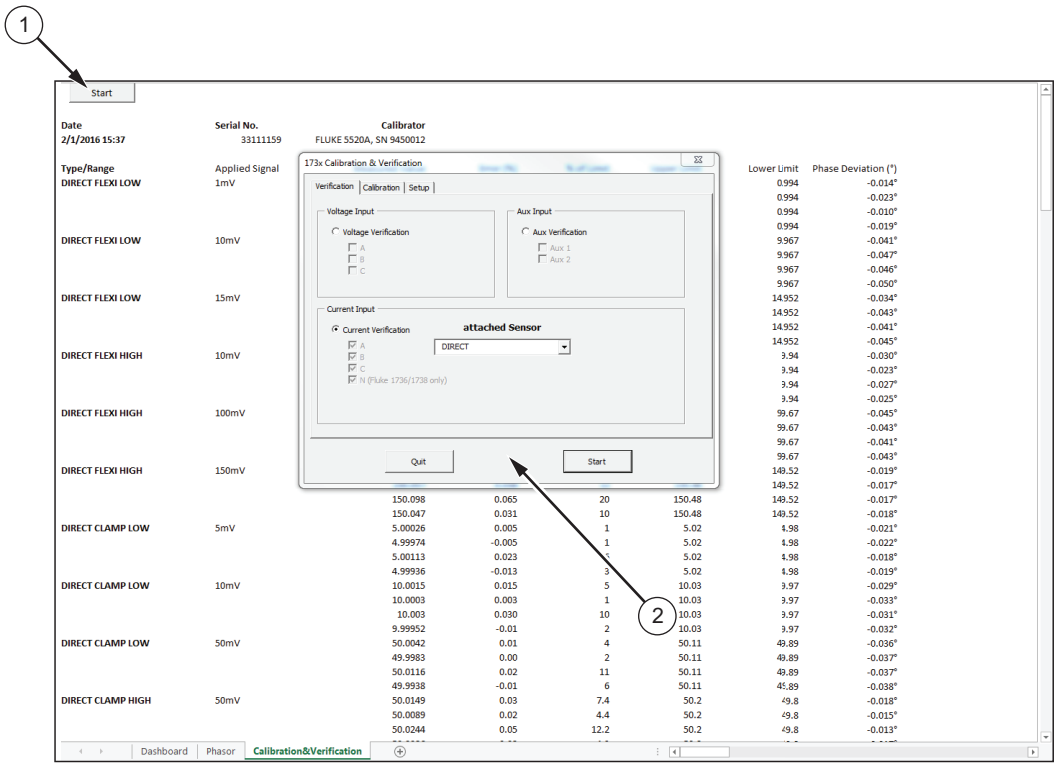 hcf102.eps 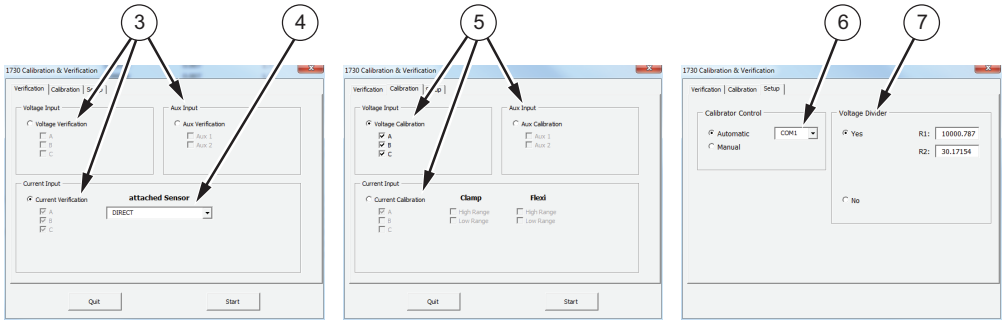 hcf103.eps
①	Start button – When the selection window ② has been closed with Quit, click the Start button again to open.
②	Selection window – Click on Verification, Calibration, and Setup to select the action. Close the window with Quit. Open again with Start ①.
③	Verification items – Select Voltage Input, AUX Input or Current Input to verify. For a Logger verification, all three items must be verified sequentially. Make sure the sensor selector ④ is set to DIRECT for the Logger verification. A specific order is not required.

Table 8. Calibration and Verification in Excel Worksheet (cont.)

Item	Description
④	Sensor selector – select items from the list for a verification of the accessory. Use DIRECT for the Fluke Logger verification.
⑤	Calibration items – Select Voltage, AUX Input or Current input for calibration. For a Logger calibration all three items need to be calibrated sequentially. A specific order is not required.
⑥	Calibrator Control setup – When the calibrator is connected to the PC using a RS232 cable select *Automatic* to control the calibrator. Use the drop-down list box to configure the COM port. Otherwise select *Manual*.
⑦	Voltage Divider setup – Configure the resistor values, R1 and R2, of the voltage divider for current verification. Store the Excel workbook to keep the applied values for future use.
Supported Calibrators: Fluke 5520A and 5522A Calibrator settings: Baud rate: 9600 Data bits: 8 Stop bit: 1 Parity: None Stall: XON/XOFF EOL: CR/LF	

Basic Instrument Setup for all Verifications

The *Fluke173x_354x-ExcelTool_Vxxx* (ExcelTool) has built-in procedures to verify and adjust the Logger. The Verification uses an external divider. This divider, (see *Verification Box Assembly*) provides more accurate voltages than a direct connection to the 5520A. The 5520A uses a divider with a 50 Ω output impedance when sourcing <330 mV. Due to variations in the Logger input impedance, the actual applied voltage is less than the programmed voltage. Using an external divider where the parallel resistance is ~30 Ω allows calculation of the applied voltage with confidence that the Logger input loading will not significantly impact the applied voltage.

The ExcelTool calculates the voltage that should be applied based on the values entered in the setup screen.

1. Apply power to the Logger using the power supply and line cord.
2. Turn on the Logger.
3. Connect the Logger USB to the PC and start a communication program. See *USB Communication*.
4. Select Measurement Setup as **no voltage transformers used**.

Accuracy Verification Procedure

The procedure verifies the Power Logger accuracy at ambient temperature 23 °C ±5 °C (intrinsic error).

A complete accuracy verification of the Fluke 173x consists of:

- Voltage Measurement
- Current Measurement
- AUX Measurement
- Optional Flexi or Current Clamp Verification

Voltage Measurement

1. Select the setup. See *Basic Instrument Setup for all Verifications*.
2. Connect the VL1730 "N" lead to the calibrator NORMAL LO.
3. The Logger must be on battery power with ≥50 % charge.
4. Connect the calibrator NORMAL V output to the VL1730 L1+L2+L3 leads.
5. Sequentially set the calibrator to the voltages indicated in Table 9 and check that the Logger reading is between the limits.
6. Do this for all ranges indicated in Table 9:
   - set the calibrator to supply a 57.0 Hz sine wave for all voltages
   - wait until each reading has stabilized

   The spreadsheet is the first choice for readings. Readings will have more resolution from the spreadsheet.
7. Push METER to select the Power Logger voltage display.

Table 9. Voltage Verification

Nominal Voltage (Range)	Calibrator voltage (57 Hz sine wave)	Minimum Reading ± (0.2 % + 0.01 %)	Maximum Reading
1000	10	9.9	10.1
1000	100	99.7	100.3
1000	500	498.9	501.1
1000	1000	998	1002

8. When you are done, set the calibrator to Standby.

Current Measurement

Fluke recommends using a divider with 30 Ω across the Logger input and 10 kΩ in series with high side of the input:

- Fluke PN 2114858 (10 kΩ)
- Fluke PN 1757740 (30 Ω) – see Table 5 for the recommended assembly of this divider. Best practice is to measure the resistor values at time of use.

Caution

Be careful when you set the calibrator output voltages. High voltages applied to the current input will damage the Logger.

1. Connect the Voltage-to-Current Input Cable Assembly to the Power Logger current probe input. See Table 3.
2. Connect the VL1730 "N" lead to the calibrator AUX LO.
3. Connect the calibrator AUX HI output to the VL1730 L1+L2+L3 leads.
4. Stack the 173x Calibration Cable Assembly together: red to red and black to black.

Note

The verification of the 3540 FC is done on the phase currents L1/A, L2/B, L3/C. Verification of the plugged neutral current is not supported.

5. Plug the attenuator into the calibrator Normal HI and LO.
6. Connect the stacked 173x Calibration Cable Assembly to the attenuator. Connect the black leads to NORMAL LO.
7. For all ranges in Table 10, set the calibrator to the voltages indicated in the given order. Check that the values are between the limits.

Table 10. Flexi Current Probe Input Verification

Range	Calibrator output[1] (57 Hz sine wave, 5V out AUX)	Nominal Reading	Logger Reading Limits
Direct Flexi Low	1.000 mV	1.000 mV	0.994…1.006
	10.000 mV	10.000 mV	9.967…10.033
	15.000 mV	15.000 mV	14.952…15.048
Direct Flexi High	10.00 mV	10.00 mV	9.94…10.06
	100.00 mV	100.00 mV	99.67…100.33
	150.00 mV	150.00 mV	149.52…150.48
Direct Clamp Low	5.00 mV	5.00 mV	4.98…5.02
	10.00 mV	10.00 mV	9.97…10.03
	50.00 mV	50.00 mV	49.89…50.11
Direct Clamp High	50.0 mV	50.0 mV	49.8…50.2
	100.0 mV	100.0 mV	99.7…100.3
	500.0 mV	500.0 mV	498.9…501.1

[1] Calibrator Output Impedance and Logger loading will effect actual voltage being applied. Use of divider and Spreadsheet described above recommended

8. When you are finished, set the calibrator to Standby.

AUX Input Check (1732/1734/1736/1738 Only)

1. Connect 173x AUX input calibration cable to the Logger AUX inputs.
2. Stack the two red banana plugs together and connect them to the calibrator Normal HI.
3. Stack the two black banana plugs together and connect them to the calibrator Normal LO.
4. For all the voltages in Table 11, set the calibrator and check that the values are between the limits.

Table 11. AUX Input Verification

Calibrator Out DC Volts	Upper Limit Vdc	Lower Limit Vdc
-10.0000	-9.9780	-10.0220
-5.0000	-4.9880	-5.0120
-1.0000	-0.9960	-1.0040
-0.5000	-0.4970	-0.5030
-0.1000	-0.0978	-0.1022
-0.0100	-0.00798	-0.01202
0.0100	0.01202	0.00798
0.1000	0.1022	0.0978
0.5000	0.5030	0.4970
1.0000	1.0040	0.9980
5.0000	5.0120	4.9880
10.0000	10.0220	9.9780

5. Set the calibrator to Standby.

Optional Verification for Flexi or Clamp (Combined Logger and Probe Specifications)

This feature of the spreadsheet checks the Logger combined with current probes. These tests use the 552x and the 5500 Coil, or the 52120A Coil as an option. The Test Uncertainty Ratios (TUR) is typically <2:1. This system can only source 1000 A, consequently, this test will not be made at full-scale of the Flexi probes.

To connect the customer current probes to the Logger:

1. Connect the VL1730 "N" lead to the calibrator NORMAL LO.
2. Connect the calibrator NORMAL V output to the VL1730 L1+L2+L3 leads.
3. Connect the calibrator AUX jacks:
   - For the 5500 Coil verification (see Table 12) connect the 5500 coil to the calibrator and the black jack to AUX LO. For a i40S-EL clamp, connect a 5-turn coil to the calibrator. Connect the red jack to either the AUX jack when <3 A is requested or the 20 A jack when >3 A is requested.
   - For the 52120A Coil verification (see Table 13) connect calibrator AUX HI and LO to the 52120A INPUT HI and LO.
4. Connect the current probes under test:
   - For the 5500 Coil verification through the 5500 Coil with arrows pointing up for the correct phase match.
   - Pass the Flexi, or clamp under test through a single loop, or 3 KA coil, or 6 KA coil, with arrows pointing up for the correct phase match as indicated in the table.
5. The spreadsheet Verification tab has an Attached Sensor drop-down list box to select the probe that is connected.

6. Set the calibrator to source 100 V @ 57 Hz and the appropriate currents for the current probe under test.
   - For the 5500 Coil verification (see Table 12) when the 20 A jack column is “No” when the AUX HI connections should be used; “Yes” when 20 A connection is required. The calibrator switches to the Standby mode when the jack requirement changes.
   - For the 52120A Coil verification (see Table 13) source the voltages listed in the table on the AUX jack, maintaining the 100 V @ 57 Hz out the Normal jacks.

Table 12. Clamp Current Probe Input Verification with 5500A/COIL

Type/Range	20 A Jack	5520A current	Applied Signal	Upper Limit	Lower Limit
i40S-EL, Clamp 40A HIGH	No	0.08 A	0.4 A	0.4108	0.3892
i40S-EL, Clamp 40A HIGH	No	0.8 A	4 A	4.036	3.964
i40S-EL, Clamp 40A HIGH	Yes	8 A	40 A	40.288	39.712
i40S-EL, Clamp 40A LOW	No	0.008 A	0.04 A	0.04108	0.03892
i40S-EL, Clamp 40A LOW	No	0.08 A	0.4 A	0.4036	0.3964
i40S-EL, Clamp 40A LOW	No	0.8 A	4 A	4.0288	3.9712
iFlex1500-12, Flexi 1500A HIGH	Yes	20 A	1000 A	1010.3	989.7
iFlex1500-12, Flexi 1500A HIGH	Yes	10 A	500 A	505.3	494.7
iFlex1500-12, Flexi 1500A HIGH	No	2 A	100 A	101.3	98.7
iFlex1500-12, Flexi 1500A LOW	No	2 A	100 A	101.03	98.97
iFlex1500-12, Flexi 1500A LOW	No	0.2 A	10 A	10.13	9.87
iFlex1500-12, Flexi 1500A LOW	No	0.02 A	1 A	1.04	0.96
iFlex3000-24, Flexi 3000A HIGH	Yes	20 A	1000 A	1010.9	989.1
iFlex3000-24, Flexi 3000A HIGH	Yes	10 A	500 A	505.9	494.1
iFlex3000-24, Flexi 3000A HIGH	No	2 A	100 A	101.9	98.1
iFlex3000-24, Flexi 3000A LOW	No	2 A	100 A	101.09	98.91
iFlex3000-24, Flexi 3000A LOW	No	0.2 A	10 A	10.19	9.81
iFlex3000-24, Flexi 3000A LOW	No	0.02 A	1 A	1.10	0.90
iFlex6000-36, Flexi 6000A HIGH	Yes	20 A	1000 A	1016.8	983.2
iFlex6000-36, Flexi 6000A HIGH	Yes	10 A	500 A	509.3	490.7
iFlex6000-36, Flexi 6000A HIGH	No	2 A	100 A	103.3	96.7
iFlex6000-36, Flexi 6000A LOW	No	2 A	100 A	101.68	98.32
iFlex6000-36, Flexi 6000A LOW	No	0.2 A	10 A	10.33	9.67
iFlex6000-36, Flexi 6000A LOW	No	0.02 A	1 A	1.195	0.805

Table 13. Clamp Current Probe Input Verification with 52120A Coil

Type/Range	52120A Range	5520A Voltage	Applied Signal	Upper Limit	Lower Limit
i40S-EL, Clamp 40A HIGH	2 A	0.4 V	0.4 A	0.4108	0.3892
i40S-EL, Clamp 40A HIGH	20 A	0.4 V	4 A	4.036	3.964
i40S-EL, Clamp 40A HIGH	120 A	0.4 V	40 A	40.288	39.712
i40S-EL, Clamp 40A LOW	2 A	0.04 V	0.04 A	0.04108	0.03892
i40S-EL, Clamp 40A LOW	2 A	0.4 V	0.4 A	0.4036	0.3964
i40S-EL, Clamp 40A LOW	20 A	0.4 V	4 A	4.0288	3.9712
iFlex1500-12, Flexi 1500A HIGH	120 A + 3 KA COIL[1]	0.6 V	1500 A	1515.3	1484.7
iFlex1500-12, Flexi 1500A HIGH	120 A + 3 KA COIL[1]	0.32 V	800 A	808.3	791.7
iFlex1500-12, Flexi 1500A HIGH	120 A	1 V	100 A	101.3	98.7
iFlex1500-12, Flexi 1500A LOW	120 A	1.1 V	110 A	111.1	108.9
iFlex1500-12, Flexi 1500A LOW	120 A	0.6 V	60 A	60.6	59.4
iFlex1500-12, Flexi 1500A LOW	2 A	1 V	1 A	1.04	0.96
iFlex3000-24, Flexi 3000A HIGH	120 A + 3 KA COIL[1]	1 V	2500 A	2525.9	2474.1
iFlex3000-24, Flexi 3000A HIGH	120 A + 3 KA COIL[1]	0.48 V	1200 A	1212.9	1187.1
iFlex3000-24, Flexi 3000A HIGH	120 A	1 V	110 A	112.0	108.0
iFlex3000-24, Flexi 3000A LOW	120 A + 3 KA COIL[1]	0.1 V	250 A	252.6	247.4
iFlex3000-24, Flexi 3000A LOW	120 A	1.1 V	110 A	111.2	108.8
iFlex3000-24, Flexi 3000A LOW	2 A	1 V	1 A	1.07	0.93
iFlex6000-36, Flexi 6000A HIGH	120 A + 6 KA COIL[1]	1.1 V	5500 A	5584.3	5415.7
iFlex6000-36, Flexi 6000A HIGH	120 A + 6 KA COIL[1]	0.5 V	2500 A	2539.3	2460.7
iFlex6000-36, Flexi 6000A HIGH	120 A	1 V	100 A	103.3	96.7
iFlex6000-36, Flexi 6000A LOW	120 A + 6 KA COIL[1]	0.11 V	550 A	558.4	541.6
iFlex6000-36, Flexi 6000A LOW	120 A	1.1 V	110 A	111.8	108.2
iFlex6000-36, Flexi 6000A LOW	2 A	1 V	1 A	1.20	0.80

[1] Steps that use coils are for performance check only due to the low TUR (Test Uncertainty Ratio).

7. When you are done, set the calibrator to Standby.

173x Auxiliary Input Adapter Verification (1732/1734/1736/1738 Only)

The Auxiliary Input Adapter has a 1000:1 divider that can be verified with a calibrator and an 8846A.

To connect to the Connector pins, use a banana-to-pin adapter (Pomona Electronics 4690 is recommended). See Table 14 and Table 15.

Table 14. 173x AUX Adapter Pin-out

Pin	Signal
1	AUX 1 +
2	AUX 1 -
3	AUX 2 +
4	AUX 2 -

Table 15. 173x AUX Voltage Divider Input

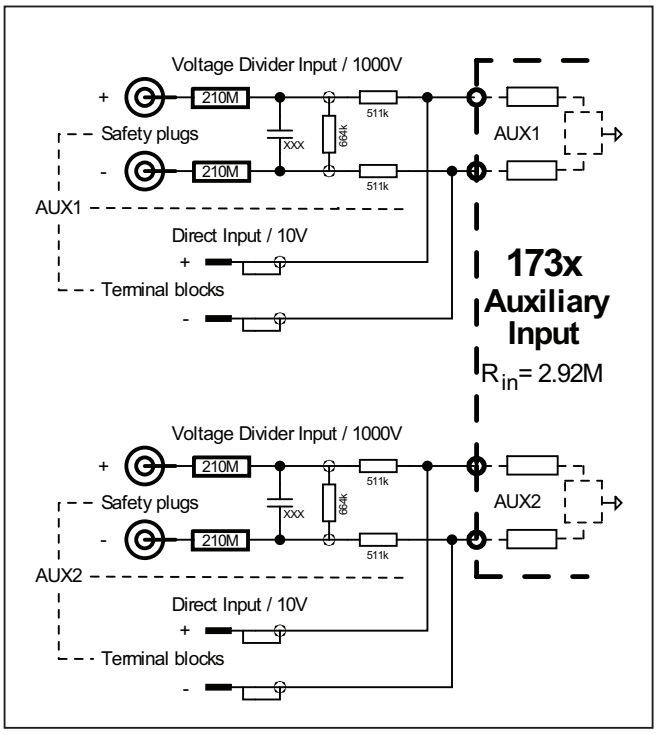

Input	Range	Intrinsic Accuracy AUX Adapter + Instrument (% of Reading + % of Range)
Direct Input	±10 V	see instrument specification
Voltage divider input	±1000 V	±(0.7 % + 0.2 V)

Note: Reference Conditions for attachment: Individual use of AUX1 or AUX2, or galvanic-isolated sources (for example, dc current clamps) at AUX1 and AUX2.

Environmental Reference Conditions: 23 °C ±5 °C, instrument operating for at least 30 minutes, no external electrical/ magnetic field, RH <65 %.

Additional Errors:

Influence by galvanic connection of sources

	Typical additional errors for measurements on galvanic-connected sources			
	2x Divider Inputs	Divider Input/Direct Input		2x Direct Inputs
Type of Influence	AUX1 or AUX2 1000 V CAT III Input	AUX1 & AUX2 1000 V CAT III Input	AUX1 or AUX2 max 30 V to ground Input	AUX1 or AUX2 max 30 V to ground Input
Common Mode [1]	1.5 % of VCM	3 % of VCM	30 ppm of VCM	0.15 % of VCM
Voltage difference [2]	0.7 % of Vdiff	1.5 % of Vdiff	15 ppm of Vdiff	0.15 % of Vdiff

[1] Common Mode Voltage VCM = Voltage difference between LO potentials of AUX1 and AUX2
[2] Voltage difference Vdiff = difference of voltages VAUX1-VAUX2 with connected LO terminals

1. Connect the 4-pin connectors AUX 1 + (pin 1) to the 8846A INPUT HI.
2. Connect the 4-pin connectors AUX 1 – (pin 2) to the 8846A INPUT LO.
3. Connect the 173x AUX Adapter box AUX 1 + and AUX 2 + to the calibrator Normal HI
4. Connect the 173x AUX Adapter box AUX 1 – and AUX 2 – to the calibrator Normal LO.
5. Set the 8846A to DC V.
6. Apply the voltages in Table 16.
7. Verify that the AUX 1 readings are between the limits.
8. After the values are checked for AUX 1, move the 4-pin connectors leads to AUX 2; Pin 3 to the 8846A INPUT HI; pin 4 connected to the 8846A INPUT LO.
9. Apply the voltages in Table 16. Verify that the AUX 2 readings are between the limits.

Table 16. AUX Input Verification

Calibrator Out DC Volts Vdc	Lower Limit Vdc	Upper Limit Vdc
100.000	0.13374	0.13617
500.000	0.66976	0.67975
990.000	1.32639	1.34564

Note

The limit values account for input loading of a 10 MΩ input on the DMM compared to 2.92 MΩ impedance of the 173x Logger. The effective scale factor changes from 1000:1 to 741.01:1. The error on the output of the Auxiliary Input Adapter is ±(0.7 % + 270 µV).

10. When finished, set the calibrator to Standby.

Calibration Adjust Procedure

This procedure adjusts the Logger accuracy at ambient temperature 23 °C ±5 °C (intrinsic error).

The required equipment and cables for calibrating the Product are listed in Table 2. See *USB Communication* for instructions on how to set up the PC.

⚠⚠ Warning

To avoid electrical shock, personal injury, or fire:

- **Do not perform the calibration procedures or calibration verification tests described in this manual unless you are qualified to do so.**
- **Repairs or servicing should be performed only by qualified personnel.**

The spreadsheet contains an automated adjust in the *Calibration & Verification* worksheet. When used, it provides connection instructions, can control the calibrator to apply the required voltage, and then will calculate and store the new calibration factors.

When this worksheet is active, the selection box should pop up. If not, click the **Start** button on the upper right of the worksheet.

In the Setup tab, only the calibrator control needs to be set (the Voltage divider is not used in the 173x Adjust).

Select the Calibration tab of the 173x Calibration & Verification pop-up. Choose Voltage, AUX, or Current calibration and check the boxes to select items for adjustment.

1. When selection is complete, click **Start**.
2. Follow the instructions provided in the automated procedure.

Note

The calibration adjust of the 3540 FC is done on the phase currents L1/A, L2/B, L3/C. Adjustment of the plugged neutral current is not supported.

When the 173x Calibration & Verification popup box shows again, the calibration factors have been calculated and stored in the Logger.

This concludes the calibration.