Memory

Memory **1x =** Recall

\+ / − 1 • • • 20

Memory **2 sec. =** Use the value shown in the Summary line for further calcuations.

Clear Off + Memory **2 Sec. =** Delete History

Clear Off

Clear Off **1x =** Set back or clear value

Clear Off **2x =** Clear all

Clear Off + Memory **2 Sec. =** Delete History

Clear Off **2 Sec. = Off**

⚠⚠ WARNING

The Meter produces a visible laser beam which emerges from the front of the Meter.

Quick Reference Guide

FLUKE®

Laser Distance Meter

419D

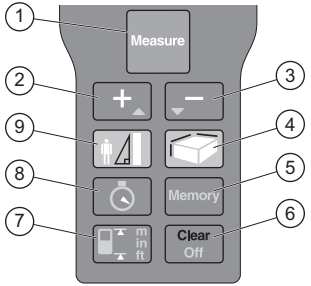

Buttons

1. Measure/Min Max/Power On
2. Plus (+)/Scroll Up
3. Minus (-)/Scroll Down
4. Area/Volume
5. Memory
6. Clear/Off
7. Reference/Units
8. Timer
9. Indirect Measurement (Pythagoras)/Stake Out

m in ft

Default



1x

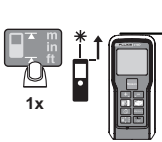

2x

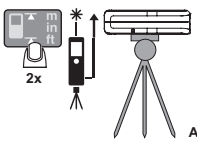

Auto-detect

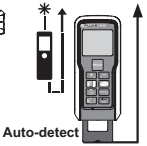

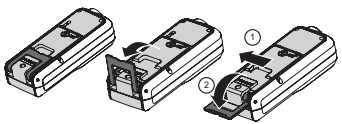

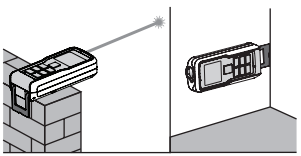

m in ft

m in ft **2 Sec. =**

0.000 m	0.00 ft
0.000⁰ m	0′00″ 1/32 *
0.00 m	0.000 in
	0 in 1/32

* default

m in ft + − = **On/Off**

m in ft + + = **On/Off**

PN 4117715 June 2012, Rev. 1, 7/16

© 2012-2016 Fluke Corporation. All rights reserved.

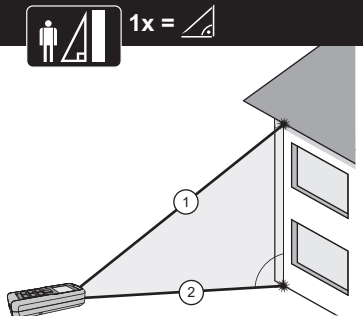
1x =
1
2

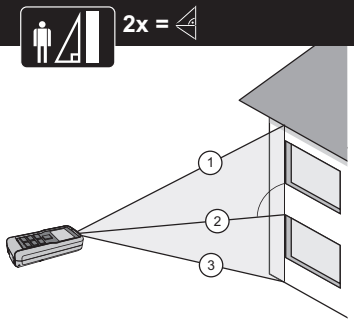
2x =
1
2
3

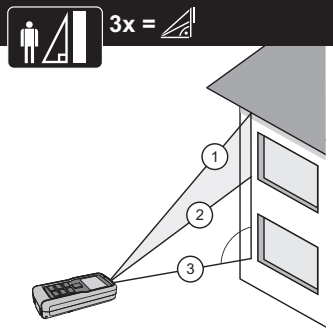
3x =
1
2
3

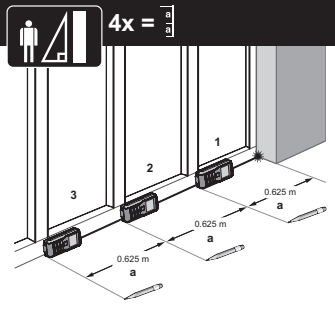
4x =
1
2
3
0.625 m
a
0.625 m
a
0.625 m
a

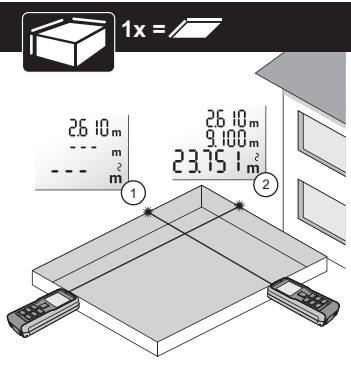
1x =
26.10 m
--- m
--- m²
26.10 m
9.100 m
23.751 m²
1
2

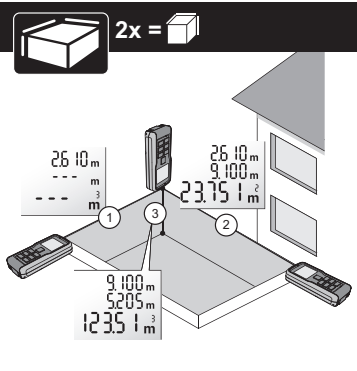
2x =
26.10 m
--- m
--- m³
26.10 m
9.100 m
23.751 m²
9.100 m
5.205 m
123.51 m³
1
2
3

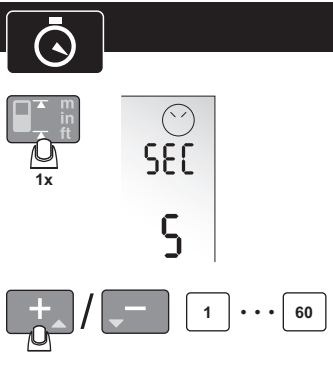
m
in
ft
1x
SEC
5
/
1
• • •
60

