

WARNING

The Meter produces a visible laser beam which emerges from the front of the Meter.

Quick Reference Guide

FLUKE®

Laser Distance Meter

414D

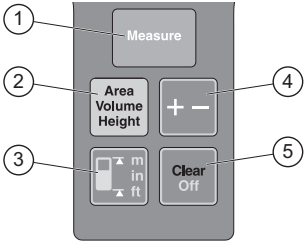

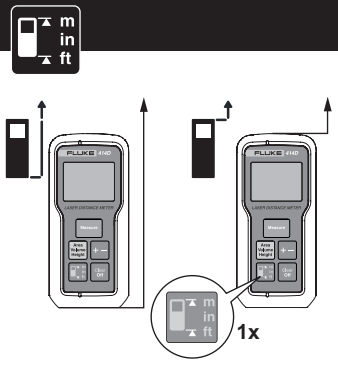

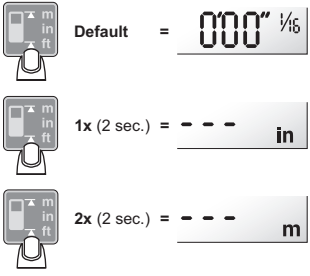

Buttons

1. Measure/Min Max/Power On
2. Area/Volume/Indirect Measurement (Pythagoras)
3. Reference/Units
4. Plus (+)/Minus(-)
5. Clear/Off

PN 4117703 June 2012, Rev. 1, 7/16
© 2012-2016 Fluke Corporation. All rights reserved.

Area
Volume
Height
1x =

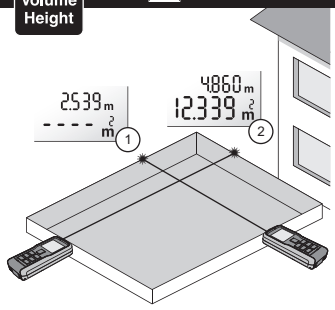

Area
Volume
Height
2x =

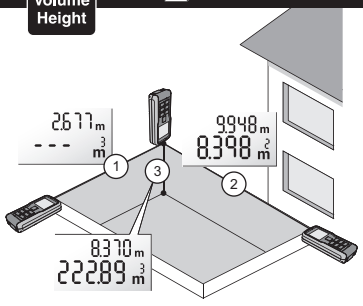

Area
Volume
Height
3x =

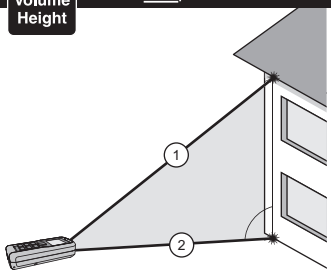

Area
Volume
Height
4x =

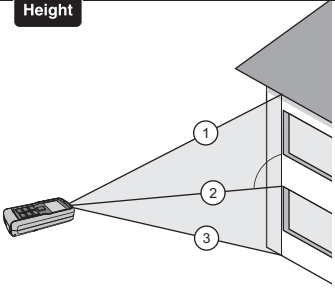

Measure

